Sumitomo Drive Technologies

# CYCLO® Drive

**Gearmotor**

**Reducer**

**CYCLO Drive for Servo Motors**

**Application Product** **CYCLO Drive with Torque Limiter**

**CYCLO Drive with Special Vertical Base Mount**

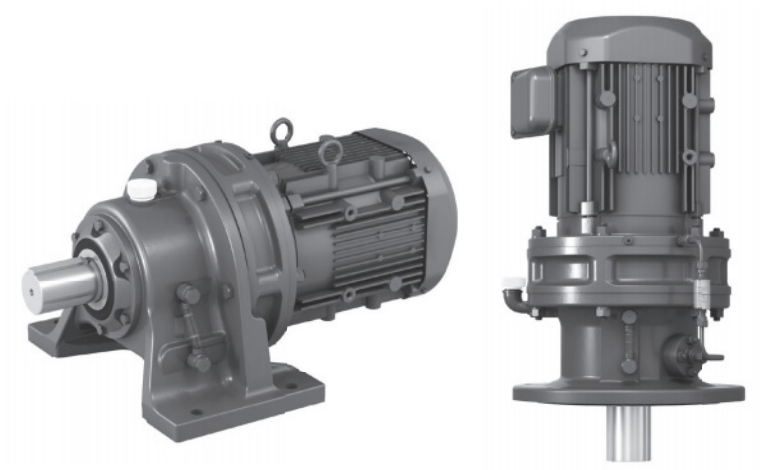

《CAUTION》

- These Products should be handled, installed and maintained by trained technicians. Carefully read the maintenance manual before use.
- A copy of this maintenance manual should be sent to the actual user.
- This maintenance manual should be kept by the user for future reference.

Sumitomo Heavy Industries, Ltd. Maintenance Manual No. CM2001E-12

- Carefully read this maintenance manual and all accompanying documents before use (installation, operation, maintenance, inspection, etc.). Thoroughly understand the machine, information about safety, and all precautions for correct operation. After reading, retain this manual for future reference.
- Pay close attention to the "DANGER" and "CAUTION" warnings regarding safety and proper use.

**DANGER** Improper handling may result in physical damage, serious personal injury and / or death.

**CAUTION** Improper handling may result in physical damage and/ or personal injury.

Matters described in CAUTION may lead to serious danger depending on the situation.
Be sure to observe important matters described herein.

## DANGER

- Transport, installation, plumbing, wiring, operation, maintenance, and inspections should be performed by trained technicians; otherwise, electric shock, injury, fire, or damage to the equipment may result.
- In the case of maintenance with disassembly, please contact the nearest authorized service station.
- When using the equipment in conjunction with explosion proof motor, a technician with electrical expertise should supervise the transport, installation, plumbing, wiring, operation, maintenance and inspection of the equipment, so as to avoid a potentially hazardous situation that may result in electrical shock, fire, explosion, personal injury and/or damage to the equipment.
- When the unit is to be used in a system for human transport, a protecting device for human safety should be installed to prevent accidents resulting in personal injury, death, or damage to the equipment due to running out of control or falling.
- When the unit is to be used for an elevator or lifter, install a safety protecting device on the elevator side to prevent falling; otherwise, personal injury, death, or damage to the equipment may result.

# Introduction: How to Refer to the Maintenance Manual, Table of Contents

This maintenance manual is common for "gearmotors", "reducers", "CYCLO Drive for servo motor" and "the application products CYCLO Drive with Torque Limiter and CYCLO Drive with Vertical Base".

The symbols shown below appear in the upper right or left corner of each page to indicate the classification. Please read the applicable pages.
On Common pages, symbols identify distinctions between specific specifications.

| Specifications | All specifications are common | Gearmotor | | Reducer (Include with Drive for servo motor) | Application product |
|---|---|---|---|---|---|
| | | Without brake | With brake | | |
| Mark | Common | | B | | Application Product |

## Contents

### Common



### Application Product CYCLO Drive with Torque Limiter



### Application Product CYCLO Drive with Vertical Special Base Mount



### Common

## ⚠ CAUTION

- Unpack the unit after verifying that it is positioned right side up; otherwise, injury may result.
- Verify that the unit received is in fact the one you ordered. Installing the wrong unit may result in personal injury or equipment damage.
- Do not remove the nameplate.

Verify the items listed below upon receiving the product. If a nonconformity or problem is found, contact our nearest agent, distributor, or sales office.

[1] Does the information on the nameplate conform to what you ordered?

[2] Was any part broken during transport?

[3] Are all bolts and nuts tightened firmly?

## 1-1 Reading the Nameplates

There are two main types of nameplates: type 1 and type 2. Representative examples are shown below. Please observe them by type.

When contacting the company, please provide [1]. Gearmotor or reducer nomenclature, [2]. Reduction ratio, and [3]. Serial number.

### (1) For gearmotor -[ ] -[B]

■ Nameplate type 1: Gear unit and motor unit are combined.

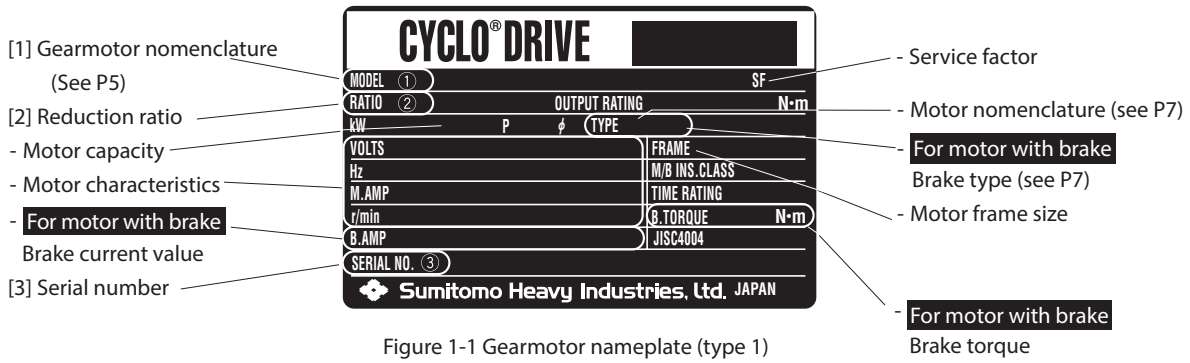


Figure 1-1 Gearmotor nameplate (type 1)

■ Nameplate type 2: Separate nameplates for gear unit and motor unit.

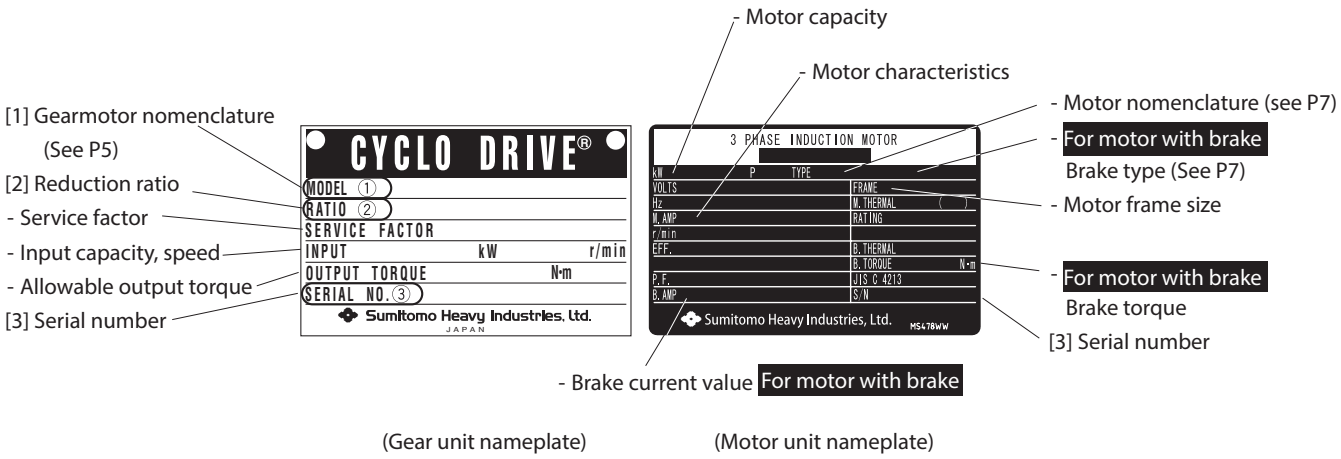


Figure 1-2 Gearmotor nameplate (type 2)

### (2) For reducer

■ Nameplate type 1

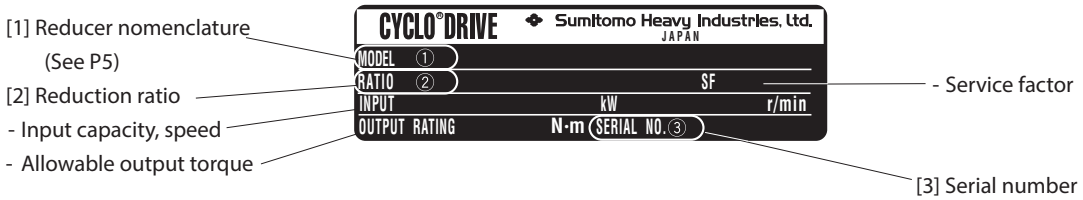


Figure 1-3 Reducer nameplate (type 1)

■ Nameplate type 2

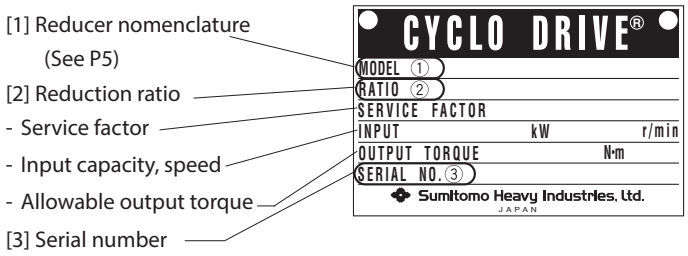


Figure 1-4 Reducer nameplate (type 2)

### (3) For torque limiter equipped Application Product (motor unit nameplate is the same as in figure 1-2.)

■ Gear unit nameplate

Confirm that the preset torque value marked in the gear unit nameplate and the preset torque value marked on the adjustment indicator plate (see P84) are the same as the required specification.

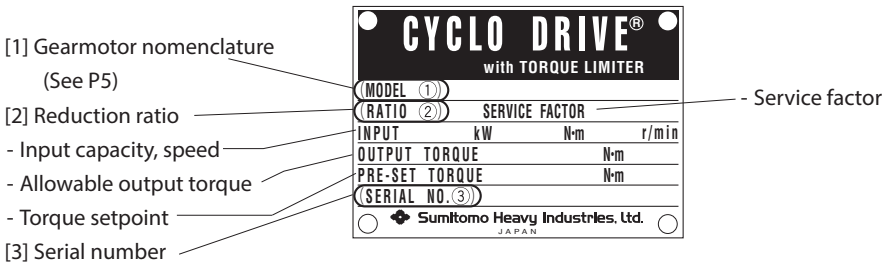


Figure 1-5 Torque limiter nameplate (gear unit nameplate)

■ Alarm torque nameplate

With 2-point signal configuration (double safety specification), an alarm torque nameplate is attached near the nameplate in figure 1-5.

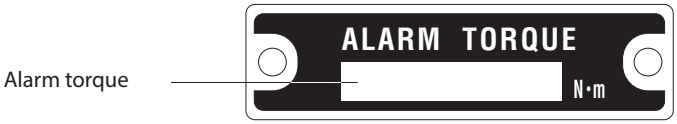


Figure 1-6 Torque Limiter Nameplate (Alarm torque nameplate)

## 1-2 Checking Lubrication Method

Refer to "8-2 Confirmation of Lubrication Method" (P37) to confirm the lubrication method.

Oil lubricated machines are shipped with oil removed. Before operating, make certain to oil with the recommended lubricating oil. (See P38–40)

## 1-3 Gearmotor, Reducer Nomenclature

Symbol meanings are shown below. Please confirm that the nomenclature matches the order.

| C | H | H | M | | 3 | – | 6130 | | – | EP | – | | – | 43 |
|---|---|---|---|---|---|---|---|---|---|---|---|---|---|---|

| Model symbol | |
|---|---|
| C | CYCLO Drive<br>CYCLO Drive SK series |
| P | CYCLO Drive low reduction ratio series |

| Slow Speed Shaft Direction | |
|---|---|
| H | Horizontal, Slow speed shaft level |
| V | Vertical. Slow speed shaft down |
| W | Inverse Vertical, Slow speed shaft up |
| N | Universal mounting |

| Vertical special base mount | | | | | | | | |
|---|---|---|---|---|---|---|---|---|
| 14 | 15 | 17 | 18 | 24 | 25 | 27 | 28 | 3 |

| Mounting style | |
|---|---|
| H | Foot |
| F | Flange |
| V | V-Flange |

| Special specification | |
|---|---|
| Blank | Standard specification |
| S | Special specification |

| Frame size |
|---|
| See P6, Table 1-1 through 1-5 |

| Shaft type | |
|---|---|
| Blank | Metric (standard) |
| Y | Inch |
| YA | AGMA I |
| YB | AGMA II |
| YC | AGMA III |
| G | Metric (DIN) |

| With or without brake | |
|---|---|
| Blank | Without brake |
| B | With brake |

| Suffix | | | |
|---|---|---|---|
| Blank[Note] | With 3-phase motor | TL | With torque limiter |
| EP | With premium-efficiency, 3-phase motor | R1 | Simple heavy radial |
| AV | With AF motor for inverter | R2 | Heavy radial |
| AP | With premium-efficiency, 3-phase motor for inverter | BP | With baseplate |
| ES | With high-efficiency, 3-phase motor | H1 | Foot mount and ceiling mount |
| VV | With vector control motor | H2 | With foot mount and left wall mount |
| LB | Low backlash | H3 | Foot mount and right wall mount |
| Various code | Motor flange code | | |

Note: Only for gearmotor

| Type of input | | |
|---|---|---|
| Gearmotor | Reducer | |
| M | | Gearmotor (motor directly connected) |
| | Blank | Reducer (free shaft) |
| XM | X | With motor flange (high speed shaft, hollow connector) |
| JM | J | With motor flange (With adapter, connected by coupling) |
| BM | B | Beier® Variator, direct coupling |
| PM | | Pulley connection |
| CM | | With clutch brake |
| RM | | With fluid coupling |

| Reduction ratio | |
|---|---|
| Actual reduction ratio | CYCLO Drive |
| Nominal ratio | CYCLO Drive SK series<br>CYCLO Drive low reduction ratio series |

Input capacity symbol (gearmotor)

| | | | | | | | | | | | | | | | | | | | | | | | |
|---|---|---|---|---|---|---|---|---|---|---|---|---|---|---|---|---|---|---|---|---|---|---|---|
| 4P | Capacity symbol | 01 | 02 | 03 | 05 | 08 | 1 | 1H | 2 | 3 | 4 | 5 | 8 | 10 | 15 | 20 | 25 | 30 | 40 | 50 | 60 | 75 | 100 |
| | kW (HP) | 0.1 (1/8) | 0.2 (1/4) | 0.25 (1/3) | 0.4 (1/2) | 0.55 (3/4) | 0.75 (1) | 1.1 (1.5) | 1.5 (2) | 2.2 (3) | 3.0 (4) | 3.7 (5) | 5.5 (8) | 7.5 (10) | 11 (15) | 15 (20) | 18.5 (25) | 22 (30) | 30 (40) | 37 (50) | 45 (60) | 55 (75) | 75 (100) |
| 6P | Capacity symbol | 056 | 16 | 26 | 36 | 56 | 86 | 106 | 156 | 206 | 256 | 306 | 406 | 506 | 606 | 756 | 1006 | 1256 | 1506 | 1756 | | | |
| | kW (HP) | 0.4 (1/2) | 0.75 (1) | 1.5 (2) | 2.2 (3) | 3.7 (5) | 5.5 (8) | 7.5 (10) | 11 (15) | 15 (20) | 18.5 (25) | 22 (30) | 30 (40) | 37 (50) | 45 (60) | 55 (75) | 75 (100) | 90 (125) | 110 (150) | 132 (175) | | | |

# 1. Inspection upon Delivery

Table 1-1 SK Series Frame Sizes

| Frame size | | | | |
|---|---|---|---|---|
| 6070SK<br>6075SK | 6080SK<br>6085SK | 6090SK<br>6095SK | 6100SK<br>6105SK | 6110SK<br>6115SK |

Table 1-2 Low Reduction Ratio Series Frame Sizes

| Frame size | | | |
|---|---|---|---|
| 6130<br>6135 | 6140<br>6145 | 6160<br>6165 | 6170<br>6175 |

Table 1-3 Single Reduction Frame Sizes

| Frame size | | | | | | | | |
|---|---|---|---|---|---|---|---|---|
| 6060<br>6065 | 6090<br>6095 | 6110<br>6115 | 6130<br>6135 | 6160<br>6165<br>616H | 6180<br>6185 | 6205 | 6235 | 6265 |
| 6070<br>6075 | 6100<br>6105<br>610H | 6120<br>6125<br>612H | 6140<br>6145<br>614H | | 6190<br>6195 | 6215 | 6245 | 6275 |
| 6080<br>6085 | | | | 6170<br>6175 | | 6225 | 6255 | |

Table 1-4 Double Reduction Frame Sizes

| Frame size | Second stage (Output stage) | First stage (Input stage) |
|---|---|---|
| 6060DA | 6060 | 6060 |
| 6065DA | 6065 | 6065 |
| 6070DA | 6070 | 6065 |
| 6075DA | 6075 | 6065 |
| 6090DA | 6090 | 6075 |
| 6095DA | 6095 | 6075 |
| 6100DA | 6100 | 6075 |
| 6105DA | 6105 | 6075 |
| 6120DA | 6120 | 6075 |
| 6120DB | 6120 | 6095 |
| 6125DA | 6125 | 6075 |
| 6125DB | 6125 | 6095 |

| Frame size | Second stage (Output stage) | First stage (Input stage) |
|---|---|---|
| 6130DA | 6130 | 6075 |
| 6130DB | 6130 | 6095 |
| 6130DC | 6130 | 6105 |
| 6135DA | 6135 | 6075 |
| 6135DB | 6135 | 6095 |
| 6135DC | 6135 | 6105 |
| 6140DA | 6140 | 6075 |
| 6140DB | 6140 | 6095 |
| 6140DC | 6140 | 6105 |
| 6145DA | 6145 | 6075 |
| 6145DB | 6145 | 6095 |
| 6145DC | 6145 | 6105 |
| 6160DA | 6160 | 6095 |
| 6160DB | 6160 | 6105 |
| 6160DC | 6160 | 6125 |

| Frame size | Second stage (Output stage) | First stage (Input stage) |
|---|---|---|
| 6165DA | 6165 | 6095 |
| 6165DB | 6165 | 6105 |
| 6165DC | 6165 | 6125 |
| 6170DA | 6170 | 6095 |
| 6170DB | 6170 | 6105 |
| 6170DC | 6170 | 6125 |
| 6175DA | 6175 | 6095 |
| 6175DB | 6175 | 6105 |
| 6175DC | 6175 | 6125 |
| 6180DA | 6180 | 6105 |
| 6180DB | 6180 | 6135 |
| 6185DA | 6185 | 6105 |
| 6185DB | 6185 | 6135 |
| 6190DA | 6190 | 6125 |
| 6190DB | 6190 | 6135 |
| 6195DA | 6195 | 6125 |
| 6195DB | 6195 | 6135 |

| Frame size | Second stage (Output stage) | First stage (Input stage) |
|---|---|---|
| 6205DA | 6205 | 6125 |
| 6205DB | 6205 | 6135 |
| 6215DA | 6215 | 6135 |
| 6215DB | 6215 | 6165 |
| 6225DA | 6225 | 6135 |
| 6225DB | 6225 | 6175 |
| 6235DA | 6235 | 6165 |
| 6235DB | 6235 | 6185 |
| 6245DA | 6245 | 6165 |
| 6245DB | 6245 | 6185 |
| 6255DA | 6255 | 6175 |
| 6255DB | 6255 | 6195 |
| 6265DA | 6265 | 6195 |
| 6275DA | 6275 | 6195 |

Table 1-5 Triple Reduction Frame Sizes

| Frame size | Third stage (Output stage) | Second stage (Intermediate stage) | First stage (Input stage) |
|---|---|---|---|
| 6060TA | 6060 | 6060 | 6060 |
| 6065TA | 6065 | 6065 | 6065 |
| 6070TA | 6070 | 6065 | 6065 |
| 6075TA | 6075 | 6065 | 6065 |
| 6090TA | 6090 | 6075 | 6065 |
| 6095TA | 6095 | 6075 | 6065 |
| 6100TA | 6100 | 6075 | 6065 |
| 6105TA | 6105 | 6075 | 6065 |
| 6120TA | 6120 | 6075 | 6065 |
| 6120TB | 6120 | 6095 | 6075 |
| 6125TA | 6125 | 6075 | 6065 |
| 6125TB | 6125 | 6095 | 6075 |
| 6130TA | 6130 | 6075 | 6065 |
| 6130TB | 6130 | 6095 | 6075 |
| 6130TC | 6130 | 6105 | 6075 |
| 6135TA | 6135 | 6075 | 6065 |
| 6135TB | 6135 | 6095 | 6075 |
| 6135TC | 6135 | 6105 | 6075 |
| 6140TA | 6140 | 6075 | 6065 |
| 6140TB | 6140 | 6095 | 6075 |
| 6140TC | 6140 | 6105 | 6075 |
| 6145TA | 6145 | 6075 | 6065 |
| 6145TB | 6145 | 6095 | 6075 |
| 6145TC | 6145 | 6105 | 6075 |
| 6160TA | 6160 | 6095 | 6075 |
| 6160TB | 6160 | 6105 | 6075 |
| 6160TC | 6160 | 6125 | 6075 |
| 6160TD | 6160 | 6125 | 6095 |
| 6165TA | 6165 | 6095 | 6075 |
| 6165TB | 6165 | 6105 | 6075 |
| 6165TC | 6165 | 6125 | 6075 |
| 6165TD | 6165 | 6125 | 6095 |

| Frame size | Third stage (Output stage) | Second stage (Intermediate stage) | First stage (Input stage) |
|---|---|---|---|
| 6170TA | 6170 | 6095 | 6075 |
| 6170TB | 6170 | 6105 | 6075 |
| 6170TC | 6170 | 6125 | 6075 |
| 6170TD | 6170 | 6125 | 6095 |
| 6175TA | 6175 | 6095 | 6075 |
| 6175TB | 6175 | 6105 | 6075 |
| 6175TC | 6175 | 6125 | 6075 |
| 6175TD | 6175 | 6125 | 6095 |
| 6180TA | 6180 | 6105 | 6075 |
| 6180TB | 6180 | 6135 | 6075 |
| 6180TC | 6180 | 6135 | 6095 |
| 6180TD | 6180 | 6135 | 6105 |
| 6185TA | 6185 | 6105 | 6075 |
| 6185TB | 6185 | 6135 | 6075 |
| 6185TC | 6185 | 6135 | 6095 |
| 6185TD | 6185 | 6135 | 6105 |
| 6190TA | 6190 | 6125 | 6075 |
| 6190TB | 6190 | 6125 | 6095 |
| 6190TC | 6190 | 6135 | 6075 |
| 6190TD | 6190 | 6135 | 6095 |
| 6190TE | 6190 | 6135 | 6105 |
| 6195TA | 6195 | 6125 | 6075 |
| 6195TB | 6195 | 6125 | 6095 |
| 6195TC | 6195 | 6135 | 6075 |
| 6195TD | 6195 | 6135 | 6095 |
| 6195TE | 6195 | 6135 | 6105 |

| Frame size | Third stage (Output stage) | Second stage (Intermediate stage) | First stage (Input stage) |
|---|---|---|---|
| 6205TA | 6205 | 6125 | 6075 |
| 6205TB | 6205 | 6125 | 6095 |
| 6205TC | 6205 | 6135 | 6075 |
| 6205TD | 6205 | 6135 | 6095 |
| 6205TE | 6205 | 6135 | 6105 |
| 6215TA | 6215 | 6135 | 6075 |
| 6215TB | 6215 | 6135 | 6095 |
| 6215TC | 6215 | 6135 | 6105 |
| 6215TD | 6215 | 6165 | 6095 |
| 6215TE | 6215 | 6165 | 6105 |
| 6215TF | 6215 | 6165 | 6125 |
| 6225TA | 6225 | 6135 | 6075 |
| 6225TB | 6225 | 6135 | 6095 |
| 6225TC | 6225 | 6135 | 6105 |
| 6225TD | 6225 | 6175 | 6095 |
| 6225TE | 6225 | 6175 | 6105 |
| 6225TF | 6225 | 6175 | 6125 |
| 6235TA | 6235 | 6165 | 6095 |
| 6235TB | 6235 | 6165 | 6105 |
| 6235TC | 6235 | 6165 | 6125 |
| 6235TD | 6235 | 6185 | 6105 |
| 6235TE | 6235 | 6185 | 6135 |
| 6245TA | 6245 | 6165 | 6095 |
| 6245TB | 6245 | 6165 | 6105 |
| 6245TC | 6245 | 6165 | 6125 |
| 6245TD | 6245 | 6185 | 6105 |
| 6245TE | 6245 | 6185 | 6135 |
| 6255TA | 6255 | 6175 | 6095 |
| 6255TB | 6255 | 6175 | 6105 |
| 6255TC | 6255 | 6175 | 6125 |
| 6255TD | 6255 | 6195 | 6125 |
| 6255TE | 6255 | 6195 | 6135 |
| 6265TA | 6265 | 6195 | 6125 |
| 6265TB | 6265 | 6195 | 6135 |
| 6275TA | 6275 | 6195 | 6125 |
| 6275TB | 6275 | 6195 | 6135 |

## 1-4 Motor Nomenclature

Symbol meanings are shown below. Please confirm that the nomenclature matches the order.

When used with a vector motor, or other manufacturer's motor (There are some models made by other manufacture.), see the relevant operation manual.

**H T C — E X □ □**

| Mounting style | |
|---|---|
| H | Foot |
| Blank | Flange |

| Type of sheath | |
|---|---|
| T | Totally enclosed |

| Rotor symbol | |
|---|---|
| C | Normal box |
| K | Special box |

| Cooling type | |
|---|---|
| F | With self-ventilating fan (external fan) |
| B | With ventilated fan |
| E | Fanless (natural air cooling) |

| Explosion Proof, Protection Type | |
|---|---|
| A | Increased safety explosion proof, indoor type |
| B | Increased safety explosion proof, out-door type |
| C | Indoor flameproof |
| CX | Outdoor flameproof |
| X | Outdoor (honexplosion proof) |
| Blank | Indoor (honexplosion proof) |

| Drive power source | |
|---|---|
| V | Inverter drive (motor for inverter) |
| Blank | Commercial power source drive |

| Support for standards and regulations | |
|---|---|
| P | Premium-efficiency motor |
| E | High-efficiency motor (IEC standard) |
| Blank | Motor other than above |

## 1-5 Brake type

Table 1-6 shows the relationship between standard brake type and motor type and capacity range.

Table 1-6 Brake type

| Brake type | Motor capacity (kW) | | | | | | |
|---|---|---|---|---|---|---|---|
| | 3-phase motor | Premium-efficiency, 3-phase motor | | AF motor for inverter | | Premium-efficiency, 3-phase motor for inverter | High-efficiency, 3-phase motor |
| | 4P | 4P | 6P | 4P | 6P | 4P | 4P |
| FB-01A1 | 0.1 | - | - | - | - | - | - |
| FB-02A1 | 0.2 0.25 | - | - | 0.1 | - | - | - |
| FB-05A1 | 0.4 | - | - | 0.2 | - | - | 0.2 |
| FB-1D | 0.55 | - | - | 0.4 | - | - | 0.4 |
| FB-1E | - | 0.75 | - | - | - | 0.75 | - |
| FB-1HE | - | 1.1 | - | - | - | - | - |
| FB-2E | - | 1.5 | - | - | - | 1.5 | - |
| FB-3E | - | 2.2 | - | - | - | 2.2 | - |
| FB-4E | - | 3.0 | - | - | - | - | - |
| FB-5E | - | 3.7 | - | - | - | 3.7 | - |
| FB-8E | - | 5.5 | - | - | - | 5.5 | - |
| FB-10E | - | 7.5 | - | - | - | 7.5 | - |
| FB-15E | - | 11 | - | - | - | 11 | - |
| FB-20 | - | 15 | - | - | - | 15 | - |
| FB-30 | - | 18.5 22 30 | 15 18.5 22 | - | - | 18.5 22 30 | - |
| ESB-250 (Horizontal Type) ESB-250-2 (Vertical Type) | - | 37 45 | 30 37 | 30 37 | 18.5 22 30 | 37 45 | - |

Note : Depending on the specification, brake type may differ from the types shown in Table 1-6. Check the nameplate.

# 2. Storage

If this product is not for immediate use, note the following points when storing it.

## 2-1 Storage Location

Store the product indoors in a clean, dry location.

Do not store outdoors. Store in a location that is free of moisture, dust, extreme temperature changes, corrosive gases, etc.

## 2-2 Storage Time

- The storage time should be within the rust prevention time shown below.
- Standard rust prevention specifications

External rust prevention: Rust prevention oil is applied when shipping from the factory. Check the rust conditions to see if any rust is forming on the machined surface every six months after shipment. Reapply the rust prevention oil or any other rust prevention process, if necessary.

Internal rust prevention

| Lubrication | Grease lubricated machines | Oil lubricated machines |
|---|---|---|
| Rust prevention time | One year | Six months |
| Storage conditions | Store in an ordinary factory or warehouse in an environment free of moisture, dust, extreme temperature changes, corrosive gases, etc. | |

- If for export, or if the storage time is longer than one year, adherence to special rust prevention specifications is required.Please consult with us.
- If the storage time is longer than one year, run for a few minutes under no load once every two to three months. Measure (see P16) and check the insulation resistance of the motor at that time.

## 2-3 Using after Storage

- Oil seals are affected by temperature, ultraviolet light and other ambient conditions and can easily degrade. After long storage periods, inspect before operation, and replace any degraded seals with new seals.
- If the storage time is longer than two years, replace the oil seal and the grease before starting operation.
- At startup, check that there are no unusual noises, vibrations, temperature rises, or other symptoms. For models with brakes, check that brakes work properly.

  If any abnormalities are found, immediately contact the nearest authorized service station.

**⚠ DANGER**

- Do not stand directly under a unit suspended by a crane or other lifting mechanism; otherwise, injury, or death may result.

**⚠ CAUTION**

- Exercise ample care so as not to drop the unit.
  When a hanging bolt or hole is provided, be sure to use it. After mounting a unit to a machine, do not hoist the entire machine using the hanging bolt or hole; otherwise, personal injury or damage to the equipment and/ or lifting device may result.
- Before hoisting, refer to the rating plate, crate, outline drawing, catalog, etc. for the weight of the unit. Never hoist a unit that exceeds the rating of the crane or other mechanism being used to lift it; otherwise, personal injury or damage to the equipment and/ or lifting device may result.
- When the products are lifted, use suitable lifting parts, and confirm which eye-bolts and nuts are not loose.
- Always drain oil lubricated models before mounting, moving, and transporting.
  Moving with lubricating oil in the machine may cause oil to escape from the air vent, etc.

# 4. Installation

## ⚠ DANGER

- Do not use a standard unit in an explosive atmosphere (which is likely to be filled with explosive gas or steam). Under such conditions, an explosion proof motor should be used; otherwise, electric shock, personal injury, explosion fire, or damage to the equipment may result.
- In the case of a Explosion proof motor, use a motor that has specifications that are appropriate for a dangerous location (a location where gas or volatile vapor is present); otherwise explosion, ignition, electric shock, injury, fire, or equipment damage may result.
- Since the inverter itself is not explosion proof, when a flameproof motor is driven by an inverter install an inverter in a place free from explosive gas; otherwise, electric shock, personal injury, explosion fire, or damage to the equipment may result.

## ⚠ CAUTION

- Do not use the products for purposes other than those shown on the nameplate or in the manufacturing specifications; otherwise, electric shock, personal injury, or damage to the equipment may result.
- Do not place flammable objects around the gearmotor; otherwise, fire may result.
- Do not place any object around the gearmotor or reducer that will hinder ventilation. Insufficient ventilation can cause excessive heat build-up that may result in burns or fire.
- Do not step on or hang from the gearmotor or reducer; otherwise injury may result.
- Do not touch the shaft end of the gearmotor or reducer, inside keyways, or the edge of the motor cooling fan with bare hands; otherwise, injury may result.
- When the unit is used in food processing applications, machines for cleanroom and so on, vulnerable to oil contamination, install an oil pan or other such device to cope with oil leakage due to breakdown or failure; otherwise, oil leakage may damage products.
- Always drain oil lubricated models before mounting, moving, and transporting. Moving with lubricating oil in the machine may cause oil to escape from the air vent, etc.

## 4-1 Installation Location

| | |
|---|---|
| Ambient temperature: | −10 to +40℃ |
| Ambient humidity: | Maximum 85% |
| Altitude: | Maximum 1,000 m |
| Atmosphere: | No corrosive or volatile gases, no steam<br>Dust-free, well-ventilated area. |
| Installation location: | Indoor type: Indoors (area with minimal dust, no contact with water)<br>Outdoor type: Indoors or outdoors (place where are got wet with common rainwater not but direct heavy wind and rain)<br>Vibration: Maximum 1G |

- Mounting in conditions other than the above requires adherence to optional specifications. Please consult with us.
- Drives built to specifications, such as explosion proofing, can be used in the specified mounting environments. However, concerning the connector to the machine used, implement measures based on the mounting environment.
- Mount in a location that enables easy operation, such as inspection and maintenance.
- Mount on a sufficiently rigid base.

## 4-2 Mounting Angle

Table 4-1 Mounting Angle

| | | |
|---|---|---|
| Grease lubricated machines | Long-life grease models (Except SK series) | Free |
| | Machine types other than the above | Slow speed shaft is horizontal or vertical (depends on nomenclature. See P5. Please consult with us for inclined mounting). |
| Oil lubricated machines | | Slow speed shaft is horizontal or vertical (depends on nomenclature. See P5. Please consult with us for inclined mounting). |

For machines built to a specified mounting angle, only use the specified mounting angle.

Do not remove the motor's eye-bolt. In the rare case that it is removed, insert a bolt or other appropriate material into the screw hole to prevent water or other substances from entering the motor through the screw hole.

For the horizontal slow speed shaft level type (see P5), attach it as shown in the figure below.

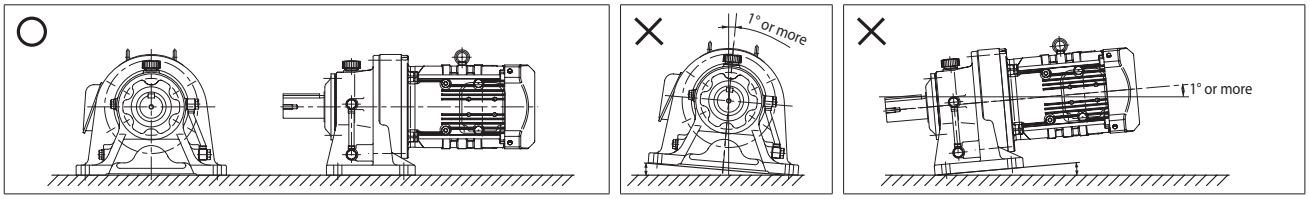


Figure 4-1 Mounting Angle (Example: Foot mount type)

## 4-3 When Load Condition Is Critical

In cases of extreme vibration or frequent startup, it is recommended to knock the foot unit, and use a mounting bolt of at least class 8.8 (JIS B 1051) strength.

## 4-4 Flange Type Assembly Issues (Models: CNFM, CHFM, CNF, CHF, etc.)

[1] Remove the fan cover if there is one installed (reducer frame size of 6160 or more).
[2] Remove the nut and bolt for ring gear housing. Take care when loosening the nut, as the bolt for ring gear housing may rotate together.
[3] A nut of a different size to the nut for ring gear housing may be assembled between the nut for ring gear housing and casing when the device is shipped. Remove this nut, as it is a spacer replacement nut for preventing damage to the faces of the nut for ring gear housing and casing, as well as for preventing the nut coming free of the threaded section of bolt for ring gear housing.
[4] Assemble the device to the driven machine, and tighten the nut and bolt for ring gear housing with the tightening torque shown in Table 4.2.

- Disassembly prevention nuts are installed at 2 locations of the bolt for ring gear housing (opposing angles) to prevent disassembly of the reducer in case the bolt for ring gear housing is removed. Do not remove the disassembly prevention nuts. Removing them may result in the casing, ring gear housing, internal cover, motor and other parts disassembling and falling off, and may cause injury.
- Using only the disassembly prevention nuts with the nut for ring gear housing removed does not generate a sufficient level of torque. Do not use only the disassembly prevention nuts for ring gear housing for long periods of time, move them excessively or subject them to shock. Lubricant or grease may leak if there gaps develop between any of the mating faces.
- Tightening the nut for ring gear housing changes the axial force of the disassembly prevention nuts, and may result in them coming loose. To remove the CYCLO Drive after temporarily assembling the device to the driven machine, check that the disassembly prevention nuts have not become loose.

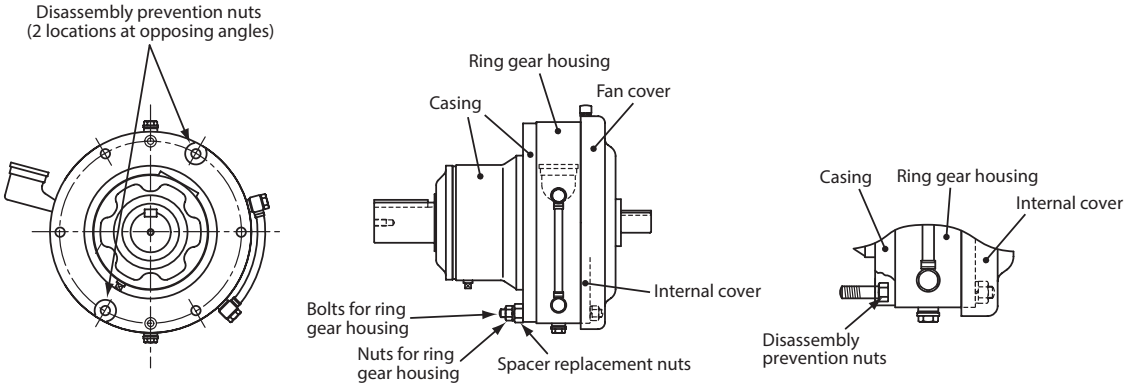


Figure 4-2 Construction Drawings

Table 4-2 Tightening torque for nuts and bolts for ring gear housing

| Frame size | | Size | Tightening Torque (N·m) |
|---|---|---|---|
| Single reduction | Double reduction | | |
| 606□ | 606□DA | M6 | 11 |
| 607□ | 607□DA | | |
| 608□ | - | M8 | 25 |
| 609□ | 609□DA | | |
| 610□ | 610□DA | | |
| 611□ | - | | |
| 612□ | 612□DA, 612□DB | M10 | 55 |
| 613□ | 613□DA, 613□DB, 613□DC | | |
| 614□ | 614□DA, 614□DB, 614□DC | | |
| 616□ | 616□DA, 616□DB, 616□DC | M12 | 96 |

| Frame size | | Size | Tightening Torque (N·m) |
|---|---|---|---|
| Single reduction | Double reduction | | |
| 617□ | 617□DA, 617□DB, 617□DC | M12 | 96 |
| 618□ | 618□DA, 618□DB | | |
| 619□ | 619□DA, 619□DB | | |
| 6205 | 6205DA, 6205DB | M16 | 219 |
| 6215 | 6215DA, 6215DB | M18 | 298 |
| 6225 | 6225DA, 6225DB | M20 | 475 |
| 6235 | 6235DA, 6235DB | | |
| 6245 | 6245DA, 6245DB | M24 | 794 |
| 6255 | 6255DA, 6255DB | | |
| 6265 | 6265DA | M30 | 1590 |

Note : 1. The symbol □ in frame size can be "0" or "5."
2. If a nut and bolt are prepared by the customer, a tightening torque that suits the nut and bolt should be used.
3. The position of the disassembly prevention nuts and the shape of each part depend on the frame size.

## 4-5 Keyless Shaft Motor Assembly Issues (Hollow Connection High Speed Shaft for Servo Motors)

[1] Remove oil, dirt, and other contaminants from the motor shaft and inside of the CYCLO Drive high speed shaft. (The inner surface of the high speed shaft is treated with rust prevention oil before shipping.)
[2] Position the reducer on a platform so that the slow speed shaft is on the bottom.
[3] Align the high speed shaft with the notch on the clamp ring.
[4] Remove the adapter plate cap and insert a hexagonal wrench through the setting hole into the hexagon socket head bolt in the clamp ring. Next, insert the motor shaft into the high speed shaft.
[5] When assembling the motor and CYCLO Drive, make sure that the centers of both shafts are aligned. Do not force the assembly if the shafts are slanted or misaligned.
[6] Fasten the motor and adapter plate using the motor mounting bolt. Tighten after confirming that the motor fitting is securely inserted into the adapter plate fitting. Important: If the bolt is tightened when the fitting is not inserted, uneven tightening will result, causing damage to the internal bearing and other components.
[7] Tighten the clamp ring hexagon socket head bolt to the torque shown in Table 4-3.
[8] After operating at low speed, increase the tightening torque as shown in Table 4-3.
[9] Attach the adapter plate cap that had been removed.

Table 4-3 Tightening torque for the clamp ring hexagon socket head bolt

| Bolt size | M4 | M5 | M6 | M8 | M10 | M12 |
|---|---|---|---|---|---|---|
| Tightening Torque (N·m) | 4.3 | 5.5 | 9.6 | 23 | 46 | 79 |

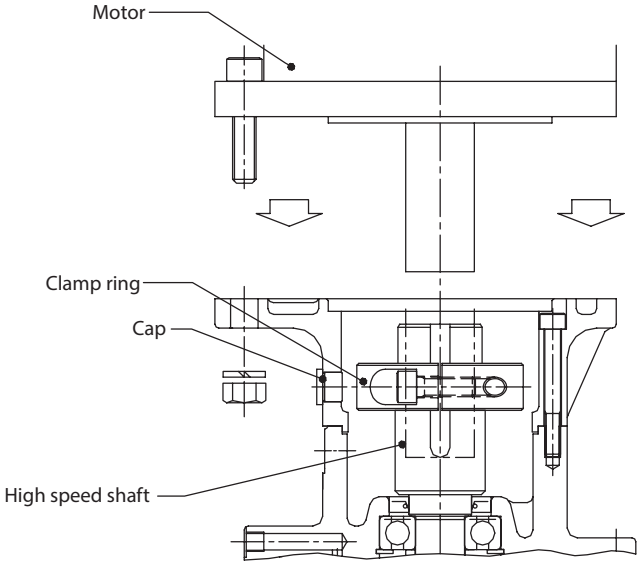


Figure 4-2 Assembly Diagram

## 4-6 Keyed Shaft Motor Assembly Issues (Hollow Connection High Speed Shaft for Servo Motor or General Flange Motors)

[1] Remove oil, dirt, and other contaminants from the motor shaft and inside of the CYCLO Drive high speed shaft. (The inner surface of the high speed shaft is treated with rust prevention oil before shipping.)
[2] Align the motor shaft key with the high speed hollow shaft keyway. (Keyway dimensions conform to JIS B 1301-1996 (ISO) "Keys and Their Corresponding Keyways: Parallel keys (Normal Type)").
[3] Coat the motor shaft with molybdenum disulfide grease to prevent fretting.
[4] Depending on the motor combination, a spacer for preventing the key from falling out may be in a separate shipment. Before assembly, insert the spacer deep into the hole in the high speed shaft. Operation with uninserted spacer could result in the key falling out and damaging the shaft.
[5] When assembling the motor and CYCLO Drive, make sure that the centers of both shafts are aligned. Do not force the assembly if the shafts are slanted or misaligned or if the key is only partially engaged.
[6] Fasten the motor and adapter plate (internal cover) using the motor mounting bolt. Tighten after confirming that the motor fitting is securely inserted into the adapter plate (internal cover) fitting. Important: If the bolt is tightened when the fitting is not inserted, uneven tightening will result, causing damage to the internal bearing and other components.

**⚠ CAUTION**

- Confirm the rotation direction before coupling the unit with the driven machine. Incorrect rotation direction may cause personal injury or damage to the equipment.
- When operating the product alone (uncoupled), remove the key that is temporarily attached to the slow speed shaft; otherwise the key could fly off, and injury may result.
- Cover rotating parts; otherwise, injury may result.
- When coupling the product with a load, check that the centering, the belt tension and parallelism of the pulleys are within the specified limits. When the unit is directly coupled with another machine, check that the direct coupling accuracy is within the specified limits. When a belt is used for coupling the unit with another machine, check the belt tension. Correctly tighten bolts on the pulley and coupling before operation; otherwise there is a risk of injury due to scattering the broken pieces or of damage to the products.

## 5-1 Checking Rotational Direction

### (1) For gearmotor

Table 5-1 shows the direction of slow speed shaft rotation when wiring is performed as on P18–31.

Table 5-1 Slow Speed Shaft Rotation Direction (Gearmotor)

| When wiring is performed as shown on P18–31, the motor shaft rotates to the right as seen from the anti-load side.<br>In the following diagrams, arrows show the direction of slow speed shaft rotation in this case. | | |
|---|---|---|
| Gear unit construction | Single Reduction – Triple Reduction | Double Reduction<br>SK Series<br>Low reduction ratio series |
| Slow speed shaft rotation direction (Seen from load side) | 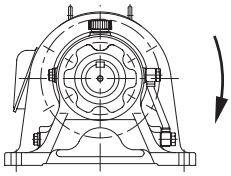 | 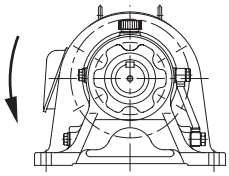 |

Note : To cause reverse rotation, reverse R and T on P18 and P20–27.

### (2) For reducer

Table 5-2 Slow Speed Shaft Rotation Direction (Reducer)

| Gear unit construction | Single Reduction – Triple Reduction | Double Reduction<br>SK Series |
|---|---|---|
| Slow speed shaft rotation direction | Rotates in opposite direction as the high speed shaft. | Rotates in same direction as the high speed shaft. |

Note : For the SK series, "SK" is appended to frame sizes.
For the low reduction ratio series, "P" is prepended to nomenclature.

## 5-2 Mounting Connected Equipment

- When mounting connected equipment, do not apply impact or excessive axial load to the shaft. The bearing could be damaged, or the collar could come off.
- Shrinkage fit is recommend.

### (1) When using a coupling

The alignment accuracy (A, B, X) in figure 5-1 should be no greater than that shown in Table 5-3.

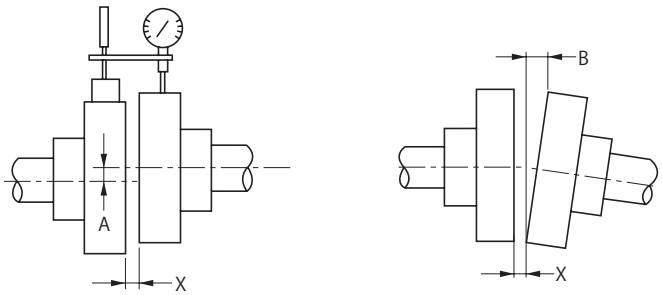


Figure 5-1

Table 5-3 Alignment Precision for Flexible Coupling

| | |
|---|---|
| Allowable tolerance A | 0.1 mm or manufacturer-specified value |
| Allowable tolerance B | 0.1 mm or manufacturer-specified value |
| X | manufacturer-specified value |

### (2) When using chains, sprockets, or gears

- When using a chain, attach so that the chain tension angle is perpendicular to the shaft.
- Refer to the chain catalog or other reference for chain tension.
- The pitch circle of the sprocket and gear shall be more than three times of the shaft diameter.
- The working load point of the sprocket or gear should go from the center of the shaft to this product. (See figure 5-2)

### (3) When using a V belt

- Over-tightening the V belt will damage the shaft and bearing. Refer to the V belt catalog or other reference for V belt tension.
- The parallelism, eccentricity β of the two pulleys should be within 20´. (See figure 5-3)
- When using multiple V belts, use a matched set having the same circumferential length.

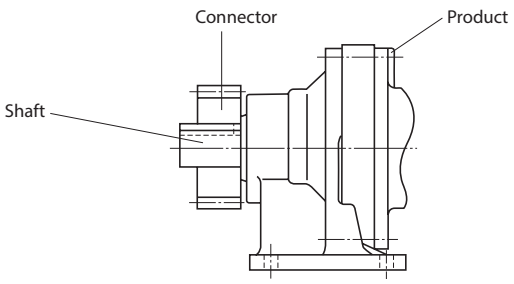


Figure 5-2

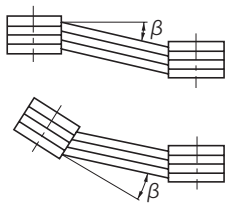


Figure 5-3

When using a vector motor, or other manufacturer's motor (There are some models made by other manufacture.), follow the operation manual for that motor.
This manual shows wiring for motors with Japanese standard specifications. Please consult with us for motors with overseas specifications.

## ⚠ DANGER

- Do not handle the unit when cables are live. Be sure to turn off the power; otherwise, electric shock may result.
- Connect a power cable to the unit according to the diagram shown inside the terminal box or in the maintenance manual; otherwise, electric shock or fire may result.
- Do not forcibly bend, pull, or clamp the power cable and lead wires; otherwise, electric shock or fire may result.
- Correctly ground the grounding bolt; otherwise, electric shock may result.
- The lead-in condition of an explosion proof motor shall conform to the facility's electrical codes, extension regulations and explosion proofing guide, as well as the maintenance manual; otherwise, electric shock, personal injury, explosion, fire or damage to the equipment may result.

## ⚠ CAUTION

- When wiring, follow the facility's electrical codes and extension regulations; otherwise, burning, electric shock, injury, or fire may result.
- The motor is not equipped with a protection device. However, it is compulsory to install an overload protector according to facility electrical codes. It is recommended to install other protective devices (earth leakage breaker, etc.), in addition to an overload protector, in order to prevent burning, electric shock, injury, and fire.
- Never touch the terminals when measuring insulation resistance; otherwise, electric shock may result.
- When using a When using a star-delta starter select one with an electromagnetic switch on the primary side (3-contact point type); otherwise, fire may result.
- Voltage PWM inverters that use IGBT generate high-voltage surges at the motor terminals, which may degrade the insulation on the motor windings. Especially such as when the cable is long in the 400V class, a surge voltage over 1300V occurs. Therefore, in this case, install an LCR filter, AC reactor, etc. between the inverter and motor to inhibit the surge voltage.
- When using a motor with brake, do not turn on connection power to the brake coil when the motor is stopped. Otherwise coil burnout fire, may result. Also, mistaken wiring could damage the rectifier.
- When a explosion proof motor is driven by an inverter, use one inverter for one motor. Use the approved inverter for the motor.
- When measuring the insulation resistance of a explosion proof motor, confirm that there is no gas or explosive vapor in the vicinity, in order to prevent possible explosion or ignition.
- If ambient temperature exceeds 60℃ , place the rectifier in a location where the temperature is 60℃ or less. In this case, always protect the entire rectifier with a cover. However, standard ambient temperature conditions for units with and without brakes is −10 to 40℃ . (Manufacture to special specification is required for operation in an environment where ambient temperature exceeds 40℃ .)
- Long cables cause large voltage drops. Select cables with appropriate diameter so that the voltage drop will no greater than 2%.
- After wiring outdoor types and explosion proof types, check that terminal box mounting bolts are not loose, and correctly attach the terminal box cover.

## 6-1 Removing and Attaching the Resin Terminal Box Cover

3-phase motor 4P: 0.1–0.4kW, high-efficiency, 3-phase motor 4P: 0.2kW, AF motor for inverter: 0.1–0.2kW

### (1) Removal

As shown in figure 6-1, to remove the cover, grab the sides of the terminal box, and pull it toward you.

### (2) Attachment

Push the terminal box cover from above the terminal box case until a click is heard.

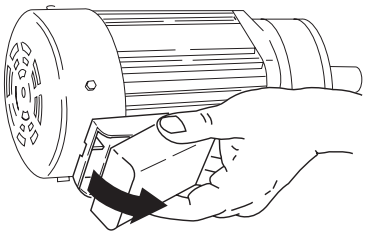

Figure 6-1

## 6-2 Measuring Insulation Resistance

When measuring insulation resistance, always disconnect the control board and measure the motor alone.

Measure insulation resistance before wiring. Insulation resistance (R) is changed by a number of factors, including motor output, voltage, type of insulation, winding temperature, moisture, degree of fouling, time used, and amount of time test voltage is applied. However, normally, it must be above the values in Table 6-1.

Table 6-1 Values for Insulation Resistance

| Motor voltage | Megaohmmeter voltage | Insulation resistance (R) |
|---|---|---|
| Low-voltage electric motors of no more than 600V | 500V | Minimum 1 MΩ |

Reference: JEC -2100 contains the following equation.

$$R \geqq \frac{\text{Rated Voltage (V)}}{\text{Rated output power (kW)} + 1{,}000} \ (\text{M}\Omega)$$

$$R \geqq \frac{\text{Rated Voltage (V)} + (\text{RPM}/3)}{\text{Rated output power (kW)} + 2{,}000} + 0.5 \ (\text{M}\Omega)$$

Low insulation resistance is a sign that there is an insulation failure. Do not apply power. Consult an accredited service station.

## 6-3 Coordination of System Protection

- Use a wiring breaker for short circuit proofing.
- Use an overload protection device designed to handle currents that exceed the rated current on the nameplate.
- For Increased safety, explosion proof motor, use an overload protection device capable of protecting the locked rotor current on the nameplate within the allowable locking time.

## 6-4 Connecting the Power Cable

Connect the power cable and motor lead wire by clasping in a pressure connection terminal as shown in figure 6-2.

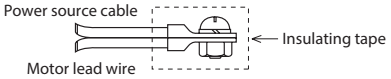


Figure 6-2

## 6-5 Motor Wiring

Shows the pages for motor wiring diagrams.

Table 6-2 Without Brake

| Motor type | | Number of poles | Capacity (kW) | Number of lead wires | Page | |
|---|---|---|---|---|---|---|
| | | | | | Direct input from commercial power source | Inverter drive |
| 3-phase motor | Standard | 4P | 0.1–0.55 | 3 | P18 | P19 |
| | | 4/8P | All | 6 | P18 | - |
| | Increased safety, explosion proof | 4P | 0.1–7.5<br>11–55 | 3<br>6 | P18 | - |
| | | 6P | 7.5<br>11–55 | 3<br>6 | P18 | - |
| | Flameproof | 4P | 0.1–22<br>30–37 | 3<br>6 | P18 | - |
| | | 4P | 0.75-3.7<br>5.5-55 | 3<br>6 | P18 | - |
| Premium-efficiency, 3-phase motor | Standard | 4P | 0.75–3.7<br>5.5–55 | 3<br>6 | P18 | P19 |
| | | 6P | 15-55 | 6 | P18 | P19 |
| | Increased safety, explosion proof | 4P | 0.75-3.7<br>5.5-11 | 3<br>6 | P18 | - |
| AF motor for inverter | Standard | 4P | 0.1–0.4<br>30–45 | 3<br>11 | - | P19 |
| | | 6P | 18.5–45 | 11 | - | P19 |
| | Flameproof | 4P | 0.2–15<br>22<br>30-55 | 3<br>6<br>11 | - | P19 |
| Premium-efficiency, 3-phase motor for inverter | | 4P | 0.75–3.7<br>5.5–55 | 3<br>6 | - | P19 |
| High-efficiency, 3-phase motor | | 4P | 0.2–0.4 | 3 | P18 | P19 |

Table 6-3 With Brake

| Motor type | Number of poles | Capacity (kW) | Brakes | Number of lead wires | Page | | |
|---|---|---|---|---|---|---|---|
| | | | | | One-direction rotation | Plugging rotation | Inverter drive |
| 3-phase motor | 4P | 0.1 | FB-01A1 | 5 | P20 | P24 | P28 |
| | | 0.2 0.25 | FB-02A1 | | | | |
| | | 0.4 | FB-05A1 | | | | |
| | | 0.55 | FB-1D | | | | |
| Premium-efficiency, 3-phase motor | 4P | 0.75 | FB-1E | 5 | P20 | P24 | P28 |
| | | 1.1 | FB-1HE | | | | |
| | | 1.5 | FB-2E | | | | |
| | | 2.2 | FB-3E | | | | |
| | | 3.0 | FB-4E | | | | |
| | | 3.7 | FB-5E | | | | |
| | | 5.5 | FB-8E | 8 | P21 | P25 | P29 |
| | | 7.5 | FB-10E | | | | |
| | | 11 | FB-15E | | | | |
| | | 15 | FB-20 | | P22 | P26 | |
| | | 18.5 22 30 | FB-30 | | | | |
| | | 37 45 | ESB-250<br>ESB-250-2 | | P23 | P27 | P30 |
| | 6P | 15 18.5 22 | FB-30 | 8 | P22<br>P23 | P26<br>P27 | P29<br>P30 |
| | | 30 37 | ESB-250<br>ESB-250-2 | | | | |
| AF motor for inverter | 4P | 0.1 | FB-02A1 | 5 | - | - | P28 |
| | | 0.2 | FB-05A1 | | | | |
| | | 0.4 | FB-1D | | | | |
| | | 30 37 | ESB-250<br>ESB-250-2 | 13 | | | P31 |
| | 6P | 18.5 22 30 | ESB-250<br>ESB-250-2 | 13 | | | P31 |
| Premium-efficiency, 3-phase motor for inverter | 4P | 0.75 | FB-1E | 5 | - | - | P28 |
| | | 1.5 | FB-2E | | | | |
| | | 2.2 | FB-3E | | | | |
| | | 3.7 | FB-5E | | | | |
| | | 5.5 | FB-8E | 8 | | | P29 |
| | | 7.5 | FB-10E | | | | |
| | | 11 | FB-15E | | | | |
| | | 15 | FB-20 | | | | |
| | | 18.5 22 30 | FB-30 | | | | |
| | | 37 45 | ESB-250<br>ESB-250-2 | | | | P30 |
| High-efficiency, 3-phase motor | 4P | 0.2 | FB-05A1 | 5 | P20 | P24 | P28 |
| | | 0.4 | FB-1D | | | | |

Note : 1. Brake type may differ depending on specification. Check the nameplate.
2. For motors with standard Japanese domestic specifications. Please consult with us for motors with overseas specifications.

Shows motor wiring and standard specification for terminals and lead wires that are indicated by symbols.

## ■ Without brake. 3-phase power source

3-phase motor
Premium-efficiency, 3-phase motor
High-efficiency, 3-phase motor

### 3 lead wires

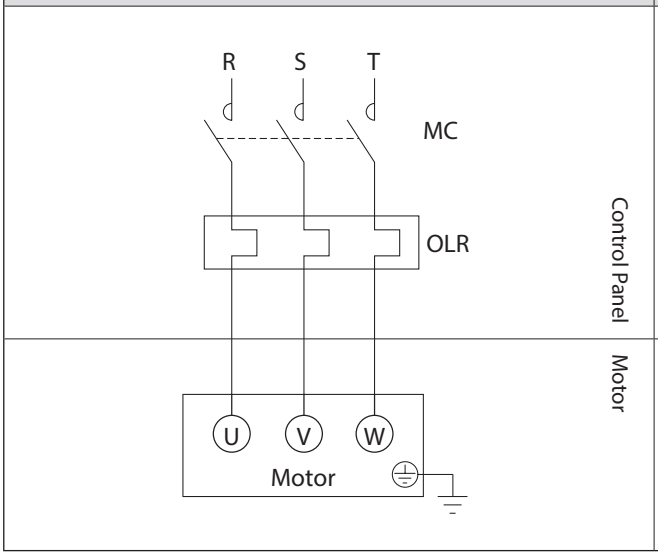


### 6 lead wires (direct on-line starting)

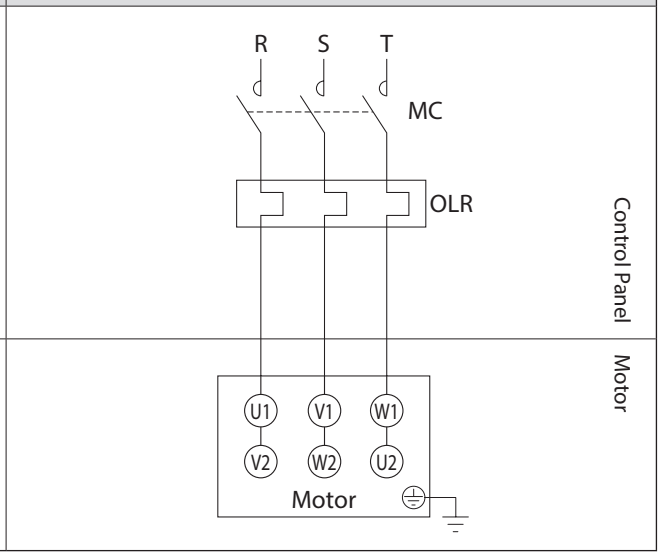


### 6 lead wires (⅄ – Δ starting)

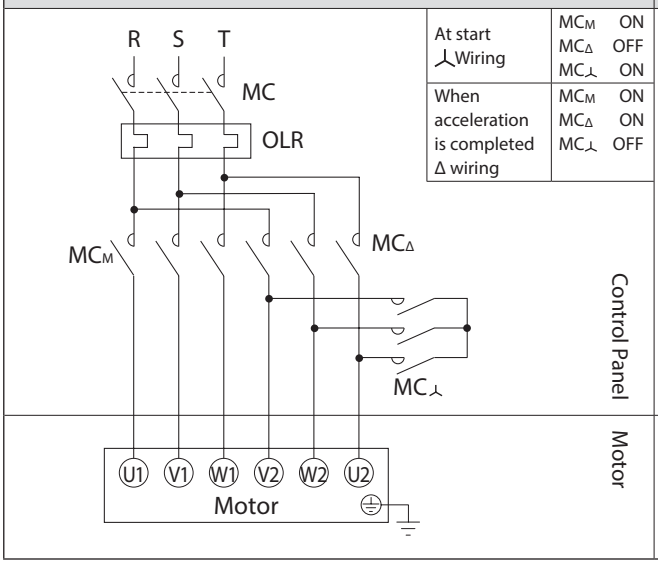


| | | |
|---|---|---|
| At start ⅄Wiring | $MC_M$ | ON |
| | $MC_\Delta$ | OFF |
| | $MC_⅄$ | ON |
| When acceleration is completed Δ wiring | $MC_M$ | ON |
| | $MC_\Delta$ | ON |
| | $MC_⅄$ | OFF |

### 4/8P two speed, single wound rotor (constant torque)

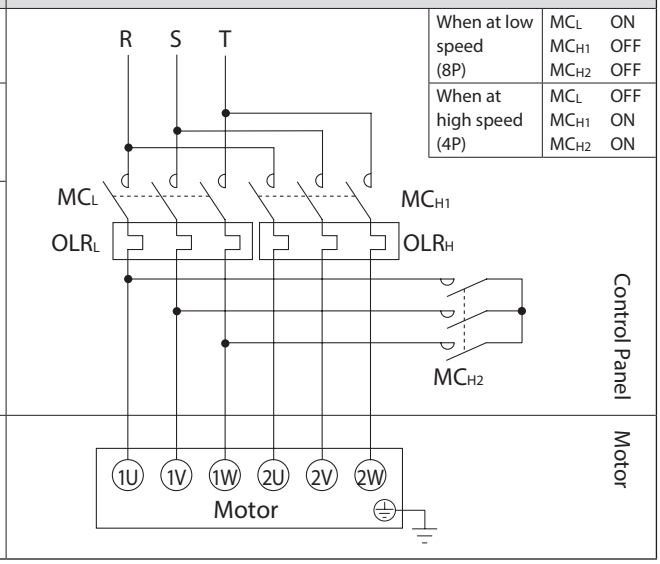


| | | |
|---|---|---|
| When at low speed (8P) | $MC_L$ | ON |
| | $MC_{H1}$ | OFF |
| | $MC_{H2}$ | OFF |
| When at high speed (4P) | $MC_L$ | OFF |
| | $MC_{H1}$ | ON |
| | $MC_{H2}$ | ON |

MC: Electromagnetic contactor
OLR: Overload protection device or electronic thermal relay
— Customer to prepare.

- This diagram shows cases for motors with standard Japanese domestic specifications. Please consult with us for motors with overseas specifications.

## ■ Without brake Inverter drive

3-phase motor
Premium-efficiency, 3-phase motor
AF motor for inverter
Premium-efficiency, 3-phase motor for inverter
High-efficiency, 3-phase motor

| 3 lead wires | 6 lead wires |
|---|---|
| 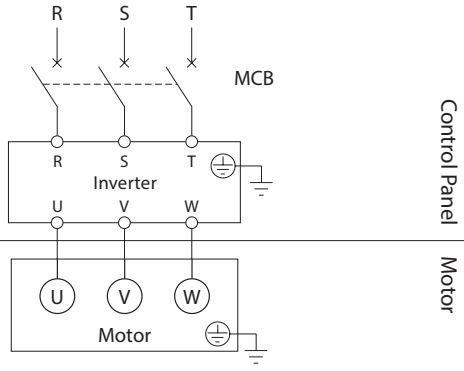 | 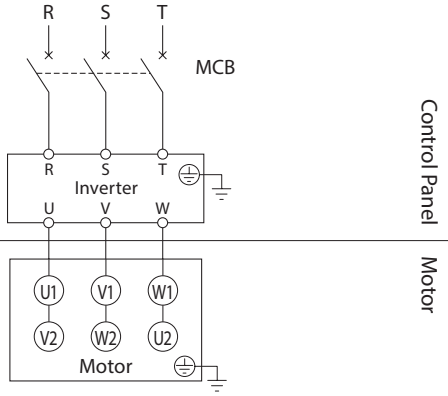 |





| 11 lead wires | |
|---|---|
| AF motor for inverter with axial fan | |
| Indoor 200V class<br>Outdoor 200V class, 400V class<br>Flameproof type | Indoor 400V class |
| 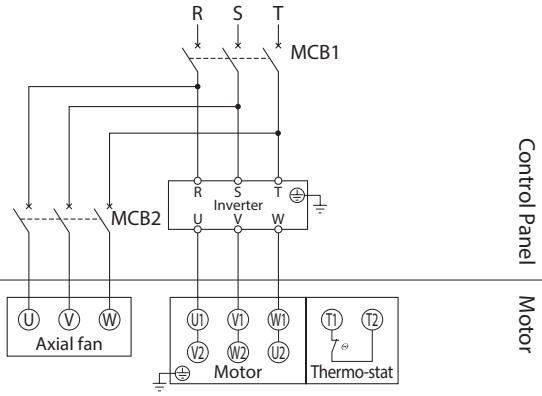 | 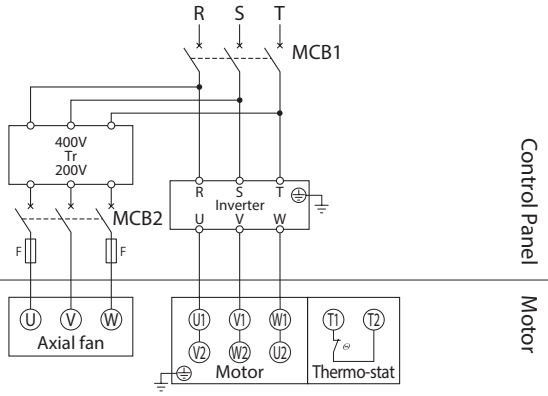 |





MCB: Breaker for wiring
Tr: Transformer capacity 250–600VA, Secondary voltage 200–220V
F: Fuse 3–5A
— Customer to prepare.

- This diagram shows cases for motors with standard Japanese domestic specifications. Please consult with us for motors with overseas specifications.
- When inverter-driving a 400V class 3-phase motor or a 400V class high-efficiency, 3-phase motor, measures must be taken with motor insulation.

In the case of With axial fan (totally enclosed, ventilated types), note the following items.

- Also connect a power source to the axial fan.
- For an indoor 400V class ( except flameproof type ), the axial fan power source voltage will be 200V class. For special specifications, specifications may differ from the above. Check the manufacturing specifications.
- Connect the fan so that it rotates in the same direction as that shown on the nameplate for direction of rotation. (Normally, the air from the fan will blow in a direction from the anti-load side to the load side.)
- When the motor is shut down for a long period, also shut down the axial fan motor.
- Wire the mounted thermostat.
- Thermostat specification: Terminal symbols: T1, T2 and P1, P2 Operating function: Normal close (b contact point)
  Operating temperature: 135℃ (for thermal class 155 (F)) Maximum current: DC 24V, 18A; AC 230V, 13A

## ■ With brake. 3-phase power source. Operates rotating in one direction.

3-phase motor
Premium-efficiency, 3-phase motor
High-efficiency, 3-phase motor

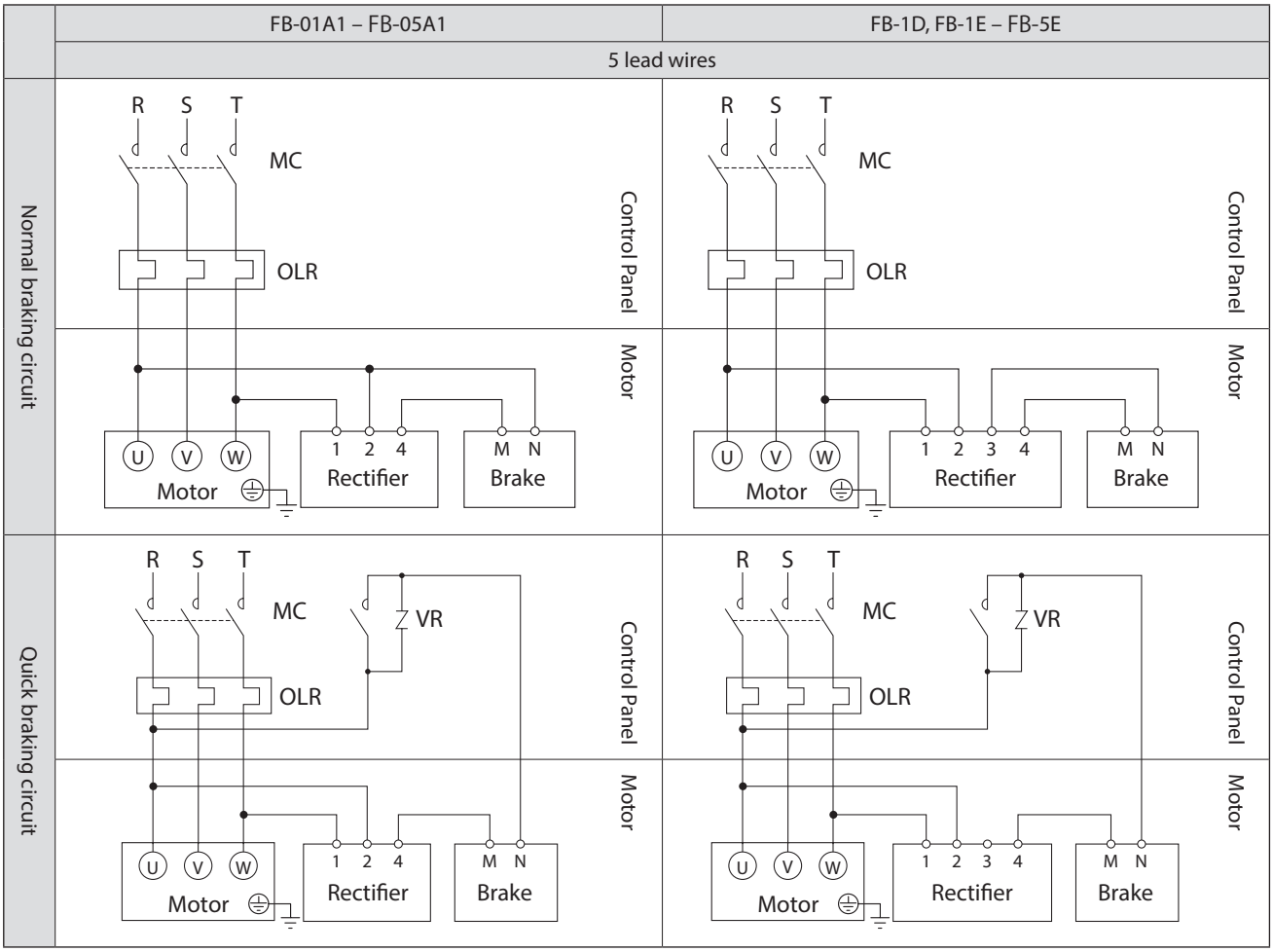


MC: Electromagnetic contactor
OLR: Overload protection device or electronic thermal relay
VR: Varistor (for protecting contact points, rectifier, etc.)
— Customer to prepare.

- This diagram shows cases for motors with standard Japanese domestic specifications. Please consult with us for motors with overseas specifications.
- For brake types, see Table 1-6 on P7.
- Brake action delay time is different for normal and quick braking circuits.
  Table 7-2 on P35 shows action delay time. Choose the circuit that matches work requirements.
- Use a quick braking circuit to improve hoisting equipment and stopping precision.
- Use a quick braking circuit when a phase-advancing capacitor is mounted.
- For information on electromagnetic contactors and varistors for quick braking circuits, see Table 6-4 on P32.
- For quick braking circuits, gang the brake circuit's electromagnetic contactor to the motor's electromagnetic contactor.

## ■ With brake. 3-phase power source. Operates rotating in one direction.

Premium-efficiency, 3-phase motor

| | FB-8E – FB-15E | |
|---|---|---|
| | 8 lead wires | |
| | Direct on-line starting | ⅄ – Δ starting |
| Normal braking circuit | 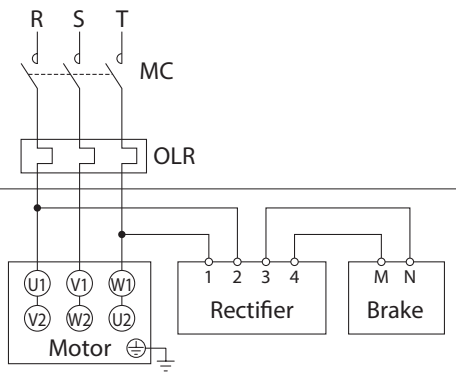 | 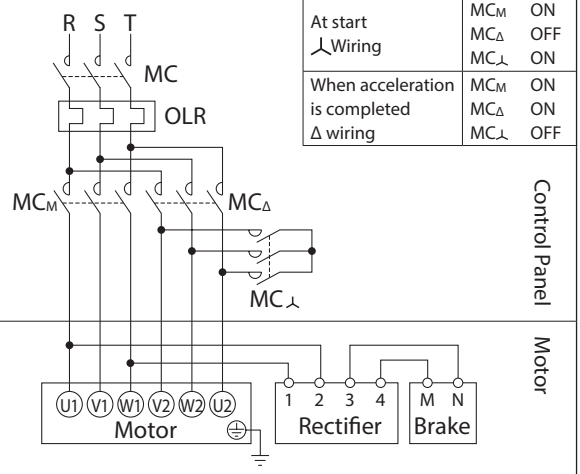 |
| Quick braking circuit | 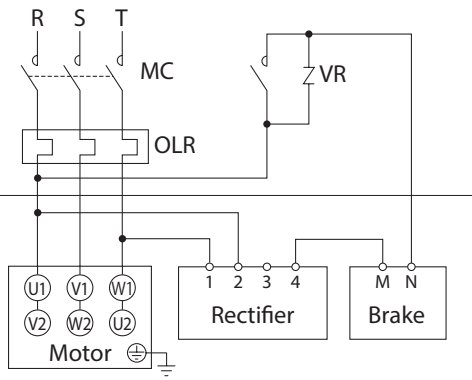 | 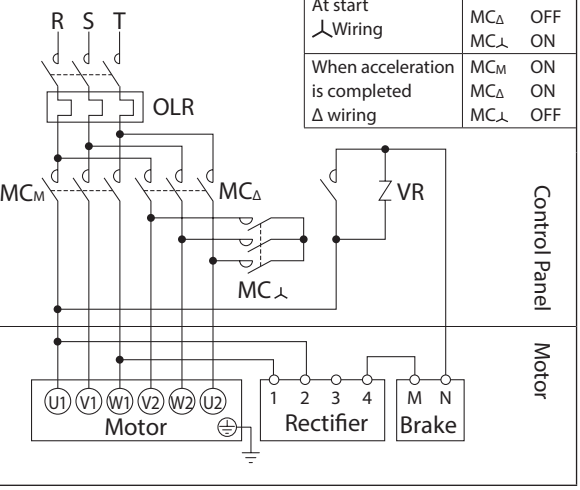 |



MC: Electromagnetic contactor
OLR: Overload protection device or electronic thermal relay
VR: Varistor (for protecting contact points, rectifier, etc.)
— Customer to prepare.

- This diagram shows cases for motors with standard Japanese domestic specifications. Please consult with us for motors with overseas specifications.
- For brake types, see Table 1-6 on P7.
- Brake action delay time is different for normal and quick braking circuits.
  Table 7-2 on P35 shows action delay time. Choose the circuit that matches work requirements.
- Use a quick braking circuit to improve hoisting equipment and stopping precision.
- Use a quick braking circuit when a phase-advancing capacitor is mounted.
- For information on electromagnetic contactors and varistors for quick braking circuits, see Table 6-4 on P32.
- For quick braking circuits, gang the brake circuit's electromagnetic contactor to the motor's electromagnetic contactor.

## ■ With brake. 3-phase power source. Operates rotating in one direction.

Premium-efficiency, 3-phase motor

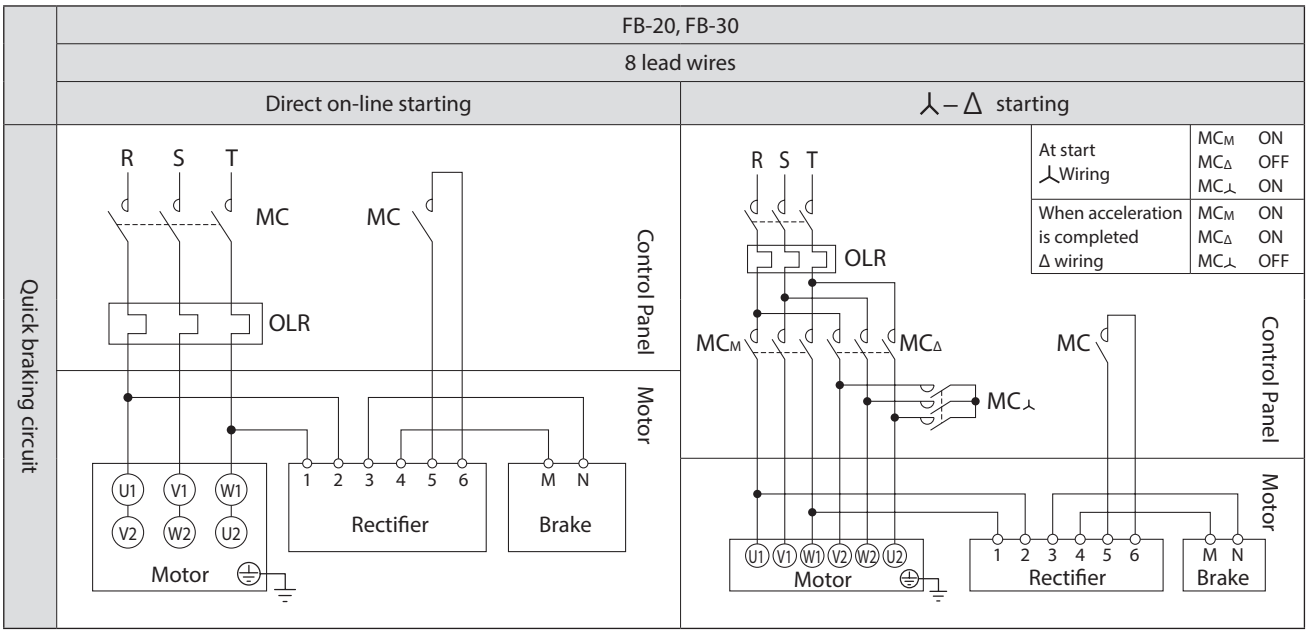


MC: Electromagnetic contactor
OLR: Overload protection device or electronic thermal relay
— Customer to prepare.

- This diagram shows cases for motors with standard Japanese domestic specifications. Please consult with us for motors with overseas specifications.
- For brake types, see Table 1-6 on P7.
- Use with a quick braking circuit. For information on electromagnetic contactors for quick braking circuits, see Table 6-4 on P32.
- For quick braking circuits, gang the brake circuit's electromagnetic contactor to the motor's electromagnetic contactor.
- Shipped with a short circuit plate connecting rectifier terminals 5 and 6. Remove the short circuit plate when wiring.

## ■ With brake. 3-phase power source. Operates rotating in one direction.

Premium-efficiency, 3-phase motor

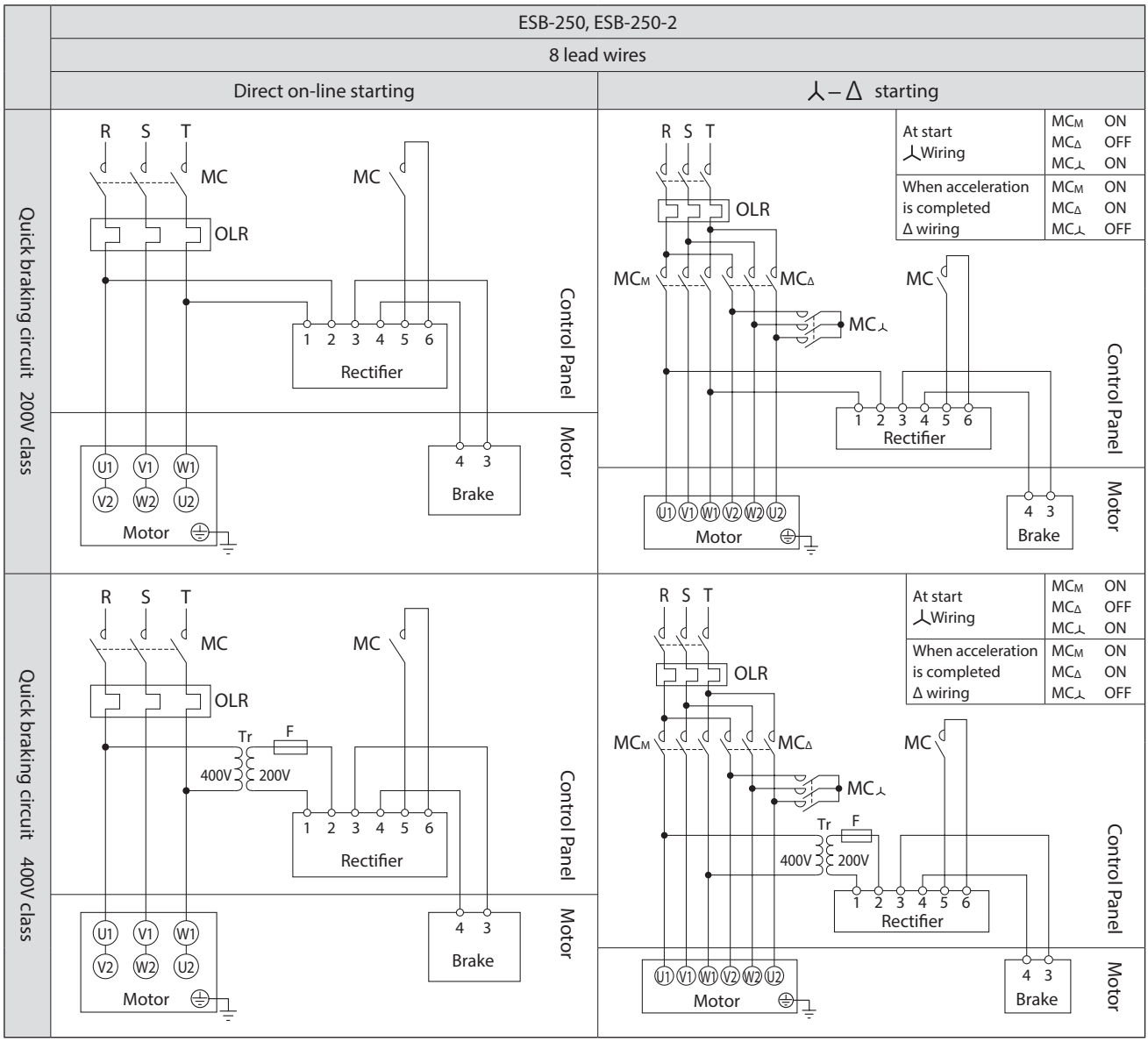


MC: Electromagnetic contactor
OLR: Overload protection device or electronic thermal relay
Tr: Transformer capacity 250–600VA, secondary voltage 200–220V
F: Fuse 3–5A

Customer to prepare.

- This diagram shows cases for motors with standard Japanese domestic specifications. Please consult with us for motors with overseas specifications.
- For brake types, see Table 1-6 on P7.
- Use with a quick braking circuit. For information on electromagnetic contactors for quick braking circuits, see Table 6-4 on P32.
- For quick braking circuits, gang the brake circuit's electromagnetic contactor to the motor's electromagnetic contactor.
- Rectifiers are external to the main unit. Rectifiers are made for indoor use. Install in an area where they will not come into contact with water, etc.
- The brake unit is for 200V class. For 400V class power sources, prepare a 400V/200V transformer.

## ■ With Brake. 3-phase motor. Plugging operation

3-phase motor
Premium-efficiency, 3-phase motor
High-efficiency, 3-phase motor

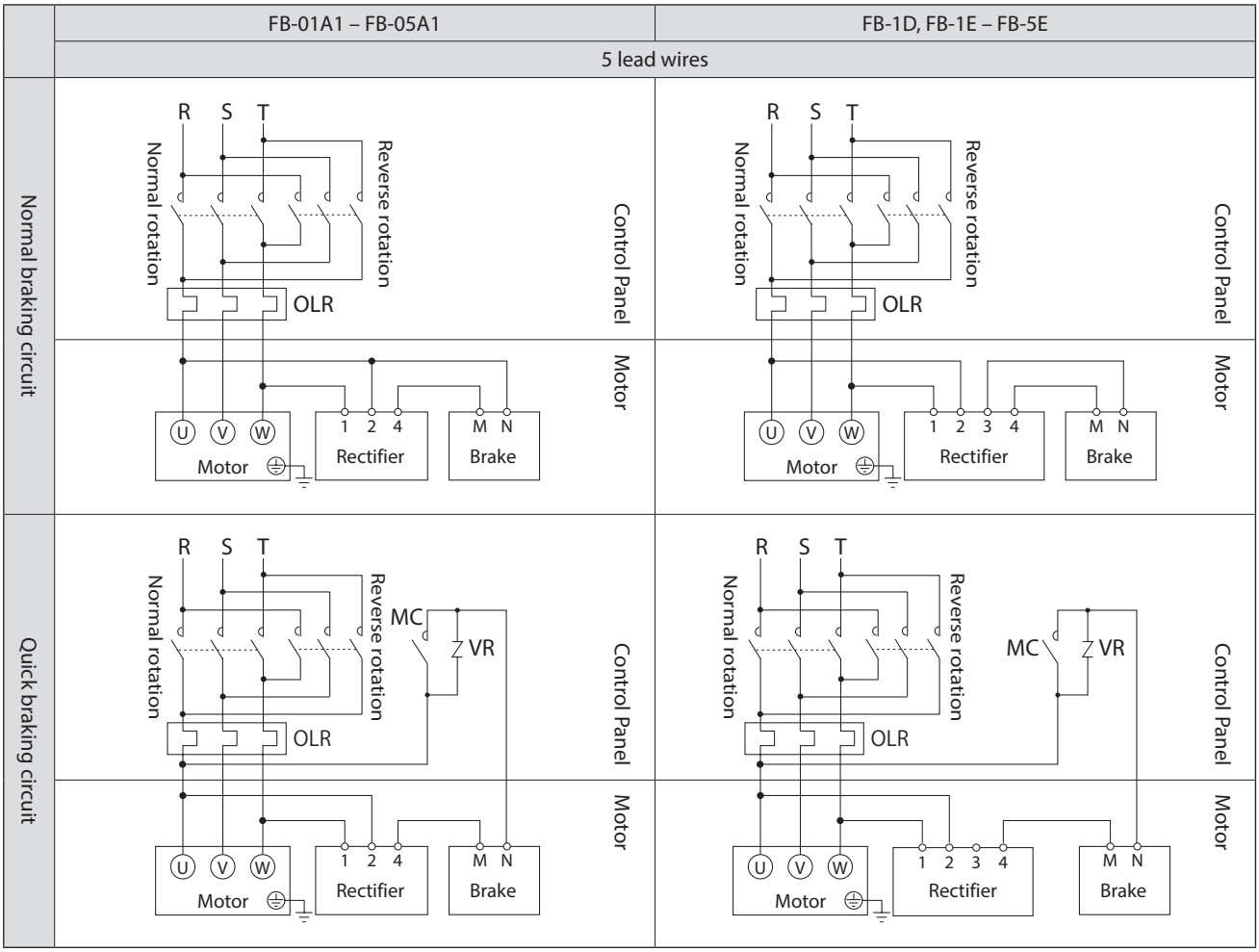


Electromagnetic contactor for normal and reverse rotation
MC: Electromagnetic contactor
OLR: Overload protection device or electronic thermal relay
VR: Varistor (for protecting contact points, rectifier, etc.)

— Customer to prepare.

- This diagram shows cases for motors with standard Japanese domestic specifications. Please consult with us for motors with overseas specifications.
- For brake types, see Table 1-6 on P7.
- Brake action delay time is different for normal and quick braking circuits.
  Table 7-2 on P35 shows action delay time. Choose the circuit that matches work requirements.
- Use a quick braking circuit to improve hoisting equipment and stopping precision.
- Use a quick braking circuit when a phase-advancing capacitor is mounted.
- For information on electromagnetic contactors and varistors for quick braking circuits, see Table 6-4 on P32.
- For plugging operations using a quick- braking circuit, gang the brake circuit's electromagnetic contactors to the motor's normal and reverse rotation electromagnetic contactors.

## ■ With Brake. 3-phase motor. Plugging operation

Premium-efficiency, 3-phase motor

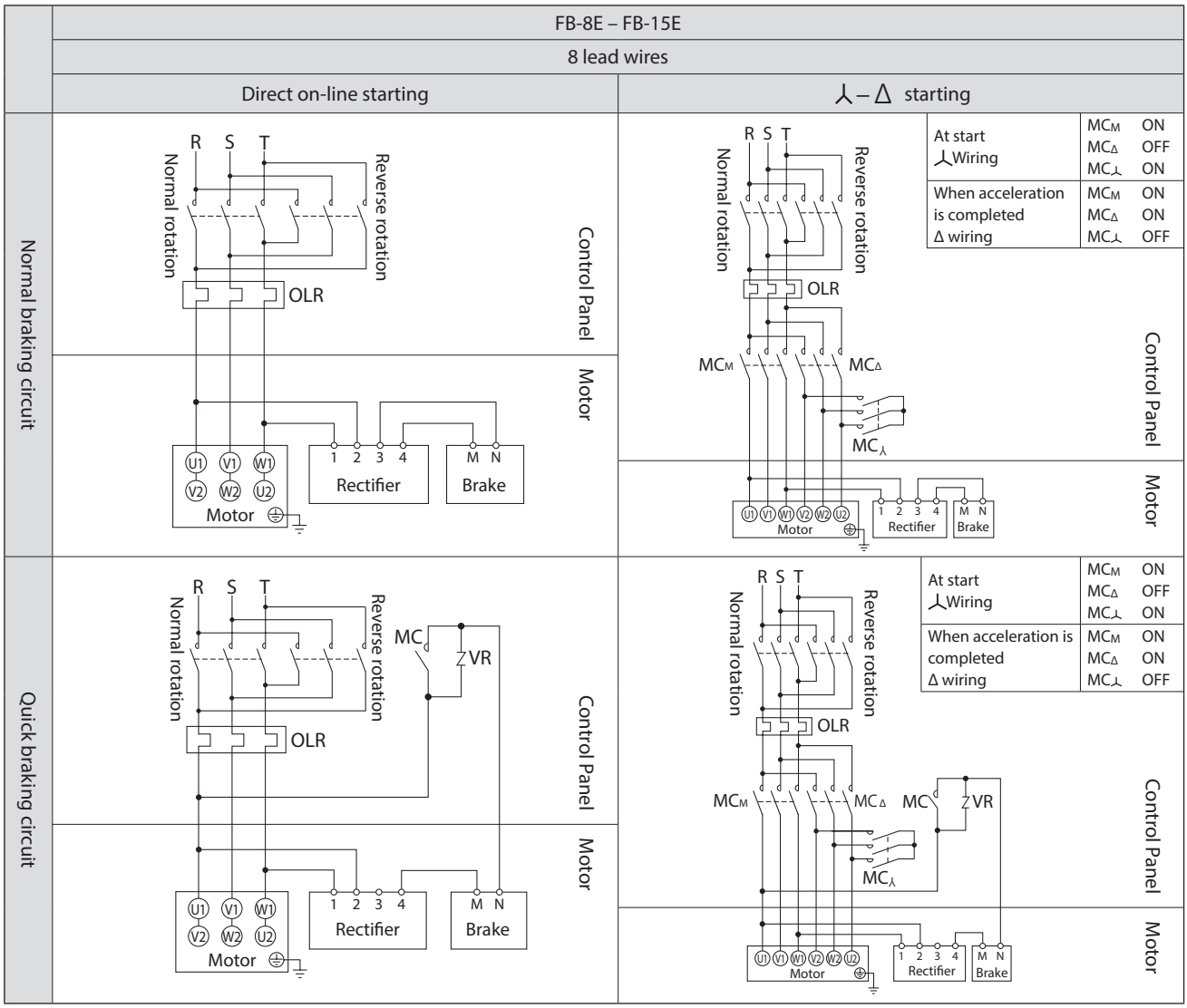


Electromagnetic contactor for normal and reverse rotation
MC: Electromagnetic contactor
OLR: Overload protection device or electronic thermal relay
VR: Varistor (for protecting contact points, rectifier, etc.)

— Customer to prepare.

- This diagram shows cases for motors with standard Japanese domestic specifications. Please consult with us for motors with overseas specifications.
- For brake types, see Table 1-6 on P7.
- Brake action delay time is different for normal and quick braking circuits.
  Table 7-2 on P35 shows action delay time. Choose the circuit that matches work requirements.
- Use a quick braking circuit to improve hoisting equipment and stopping precision.
- Use a quick braking circuit when a phase-advancing capacitor is mounted.
- For information on electromagnetic contactors and varistors for quick braking circuits, see Table 6-4 on P32.
- For plugging operations using a quick braking circuit, gang the brake circuit's electromagnetic contactors to the motor's normal and reverse rotation electromagnetic contactors.

## ■ With Brake. 3-phase motor. Plugging operation

Premium-efficiency, 3-phase motor

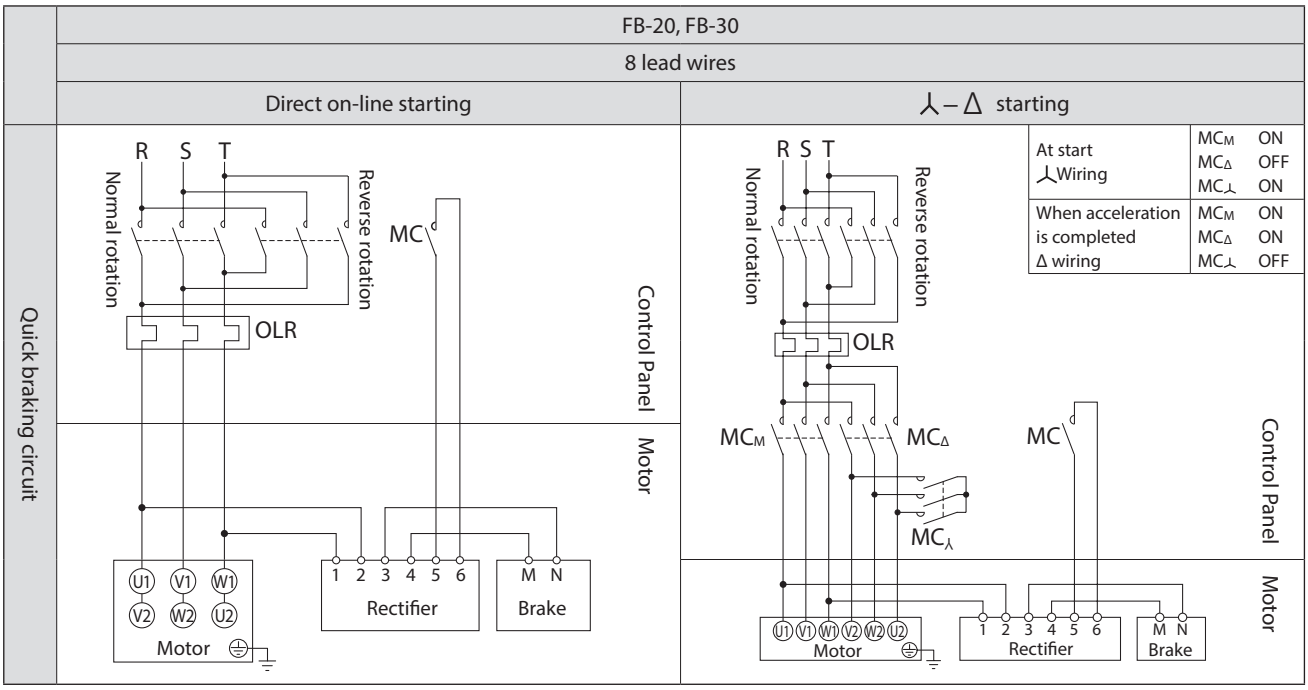


Electromagnetic contactor for normal and reverse rotation
MC: Electromagnetic contactor
OLR: Overload protection device or electronic thermal relay
— Customer to prepare.

- This diagram shows cases for motors with standard Japanese domestic specifications. Please consult with us for motors with overseas specifications.
- For brake types, see Table 1-6 on P7.
- Use with a quick braking circuit. For information on electromagnetic contactors for quick braking circuits, see Table 6-4 on P32.
- Shipped with a short circuit plate connecting rectifier terminals 5 and 6. Remove the short circuit plate when wiring.
- For plugging operations, gang the brake circuit's electromagnetic contactors to the motor's normal and reverse rotation electromagnetic contactors

## ■ With Brake. 3-phase motor. Plugging operation

Premium-efficiency, 3-phase motor

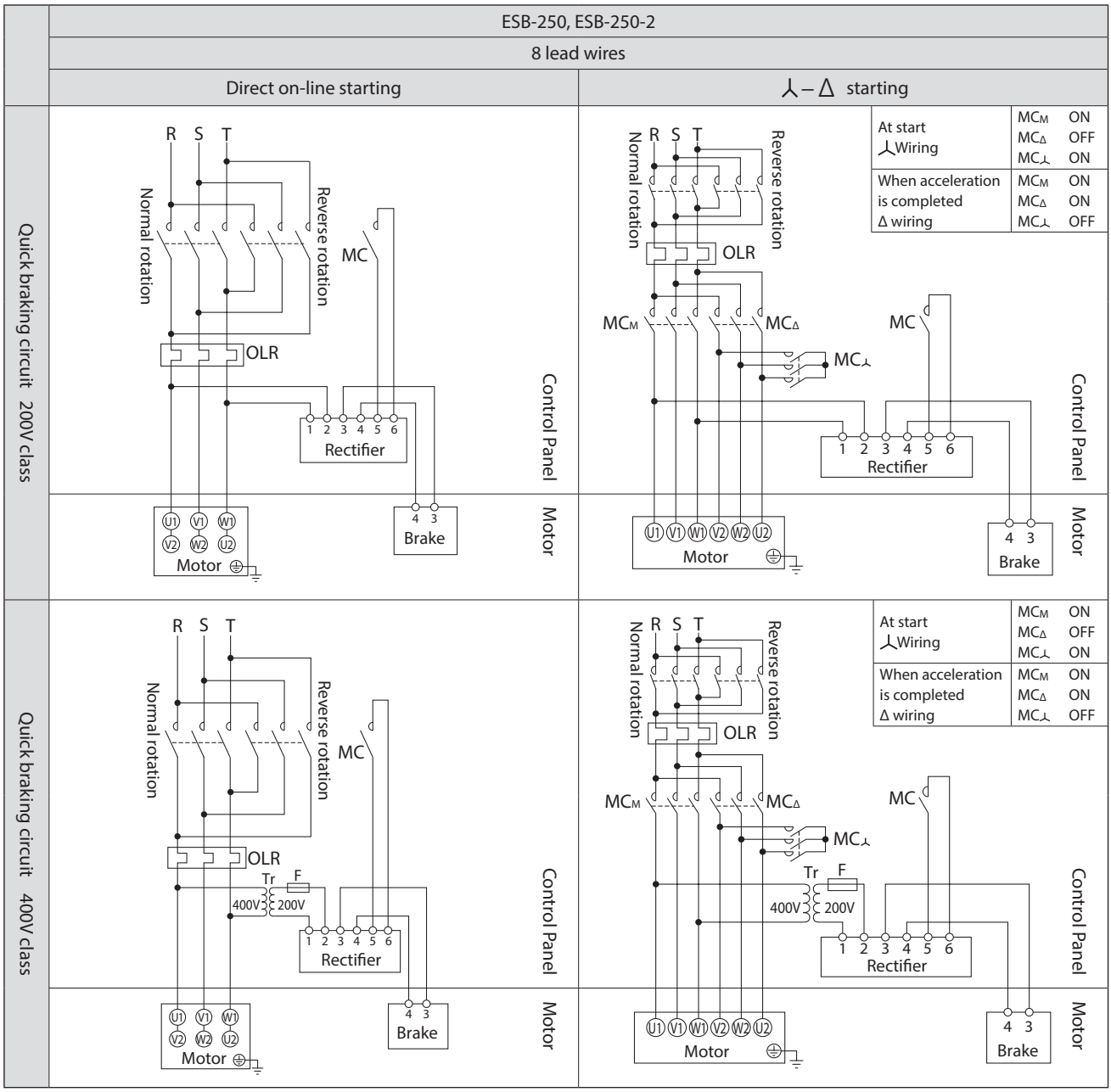


Electromagnetic contactor for normal and reverse rotation
MC: Electromagnetic contactor
OLR: Overload protection device or electronic thermal relay
Tr: Transformer capacity 250–600VA, secondary voltage 200–220V
F: Fuse 3–5A

Customer to prepare.

- This diagram shows cases for motors with standard Japanese domestic specifications. Please consult with us for motors with overseas specifications.
- For brake types, see Table 1-6 on P7.
- Use with a quick braking circuit. For information on electromagnetic contactors for quick braking circuits, see Table 6-4 on P32.
- Rectifiers are external to the main unit. Rectifiers are made for indoor use. Install in an area where they will not come into contact with water, etc.
- The brake unit is for 200V class. For 400V class power sources, prepare a 400V/200V transformer.
- For plugging operations, gang the brake circuit's electromagnetic contactors to the motor's normal and reverse rotation electromagnetic contactors

## ■ With brake Inverter drive

3-phase motor
Premium-efficiency, 3-phase motor
AF motor for inverter
Premium-efficiency, 3-phase motor for inverter
High-efficiency, 3-phase motor

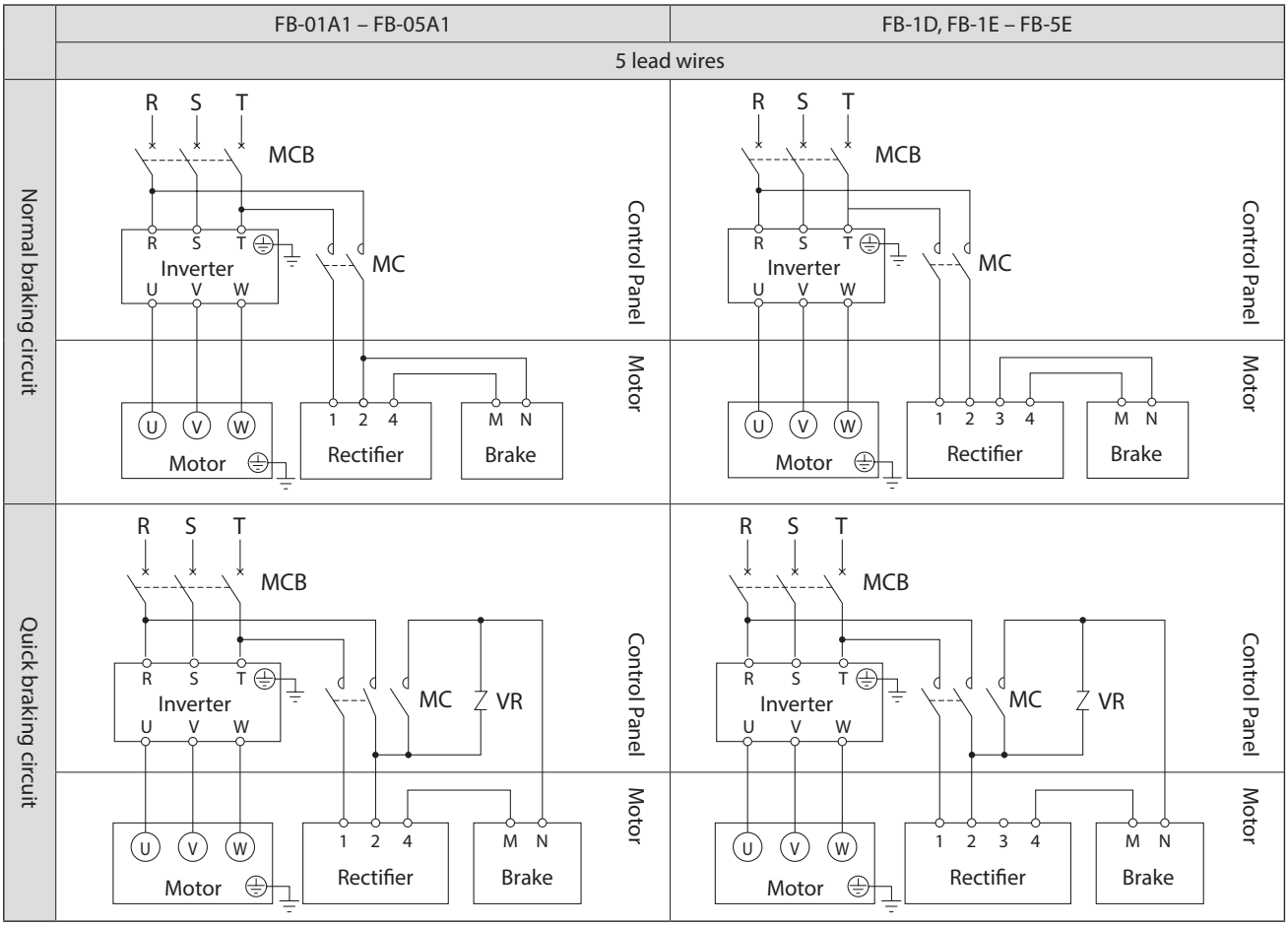


MC: Electromagnetic contactor
MCB: Breaker for wiring
VR: Varistor (for protecting contact points, rectifier, etc.)
— Customer to prepare.

- This diagram shows cases for motors with standard Japanese domestic specifications. Please consult with us for motors with overseas specifications.
- For brake types, see Table 1-6 on P7.
- When inverter-driving a 400V class 3-phase motor or a 400V class high-efficiency, 3-phase motor, measures must be taken with motor insulation.
- Brake action delay time is different for normal and quick braking circuits.
  Table 7-2 on P35 shows action delay time. Choose the circuit that matches work requirements.
- Use a quick braking circuit to improve hoisting equipment and stopping precision.
- Use a quick braking circuit when a phase-advancing capacitor is mounted.
- For information on electromagnetic contactors and varistors for quick braking circuits, see Table 6-4 on P32.

- Always use the inverter's power source side for the brake power source.
- Match the opening and closing of the brake circuit's electromagnetic contactor to the timing of the inverter control.

## ■ With brake Inverter drive

Premium-efficiency, 3-phase motor
Premium-efficiency, 3-phase motor for inverter

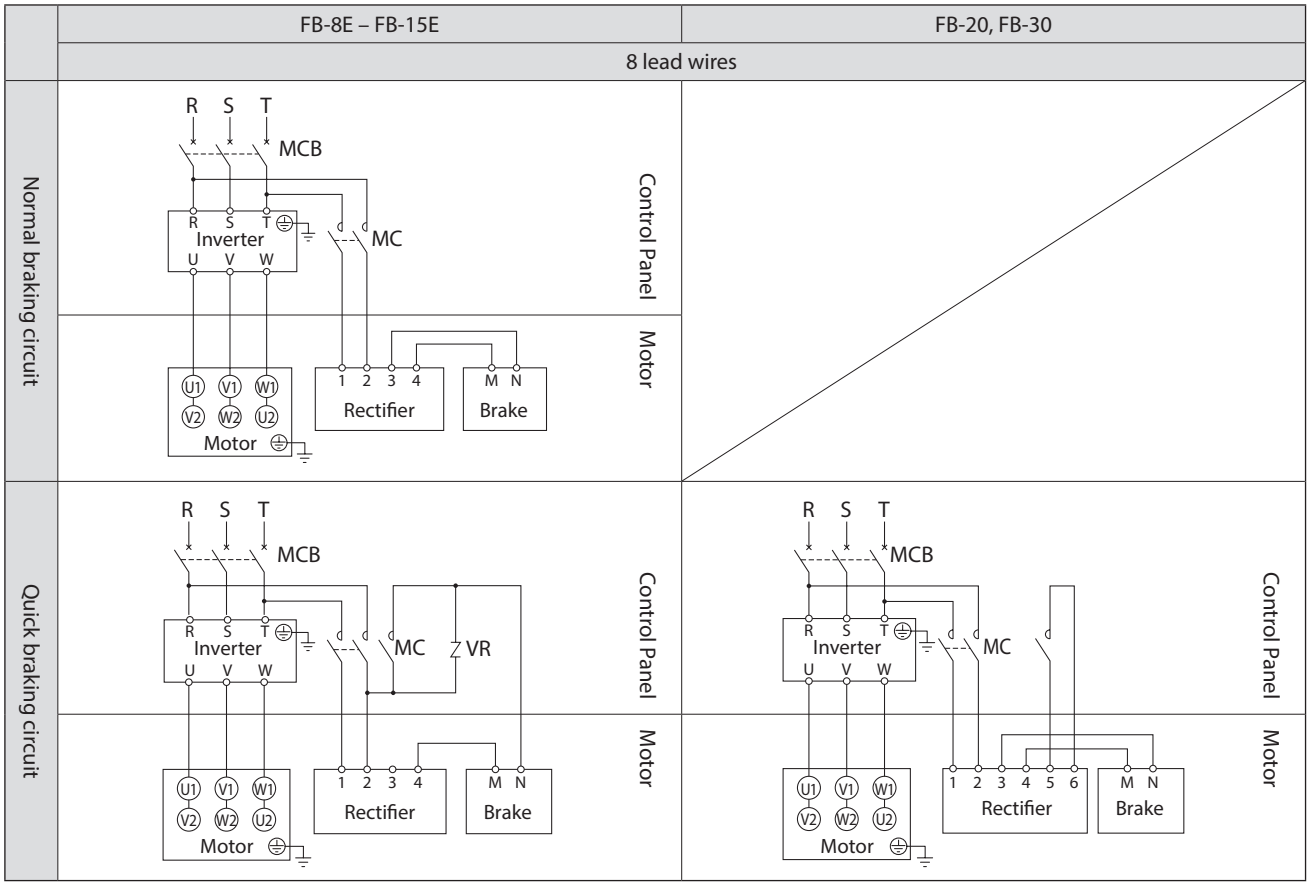


MC: Electromagnetic contactor
MCB: Breaker for wiring
VR: Varistor (for protecting contact points, rectifier, etc.)
— Customer to prepare.

- This diagram shows cases for motors with standard Japanese domestic specifications. Please consult with us for motors with overseas specifications.
- For brake types, see Table 1-6 on P7.
- Brake action delay time is different for normal and quick braking circuits.
  Table 7-2 on P35 shows action delay time. Choose the circuit that matches work requirements.
- Use a quick braking circuit to improve hoisting equipment and stopping precision.
- Use a quick braking circuit when a phase-advancing capacitor is mounted.
- For information on electromagnetic contactors and varistors for quick braking circuits, see Table 6-4 on P32.

- Use FB-20, FB-30 with quick braking circuits.
- FB-20, FB-30 are shipped with a short circuit plate connecting terminals 5 and 6. Remove the short circuit plate when wiring.

- Always use the inverter's power source side for the brake power source.
- Match the opening and closing of the brake circuit's electromagnetic contactor to the timing of the inverter control.

## ■ With brake Inverter drive

Premium-efficiency, 3-phase motor
Premium-efficiency, 3-phase motor for inverter

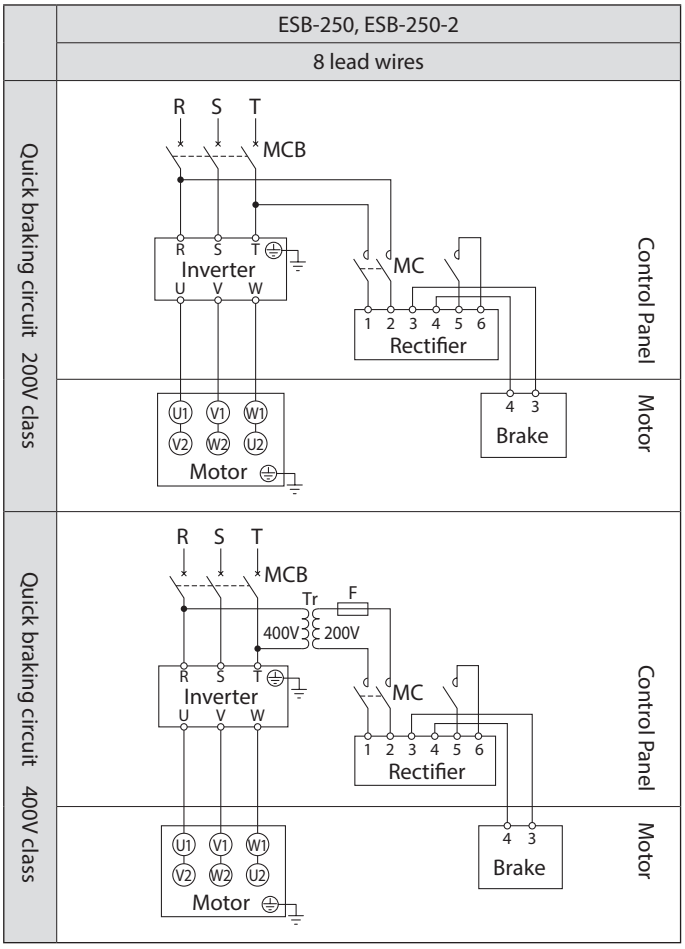


MC: Electromagnetic contactor
MCB: Breaker for wiring
Tr: Transformer capacity 250–600VA, secondary voltage 200–220V
F: Fuse 3–5A

— Customer to prepare.

- This diagram shows cases for motors with standard Japanese domestic specifications. Please consult with us for motors with overseas specifications.
- For brake types, see Table 1-6 on P7.
- Use with a quick braking circuit. For information on electromagnetic contactors for quick braking circuits, see Table 6-4 on P32.
- Rectifiers are external to the main unit. Rectifiers are made for indoor use. Install in an area where they will not come into contact with water, etc.
- The brake unit is for 200V class. For 400V class power sources, prepare a 400V/200V transformer.

- Always use the inverter's power source side for the brake power source.
- Match the opening and closing of the brake circuit's electromagnetic contactor to the timing of the inverter control.

## ■ With brake Inverter drive

AF motor for inverter

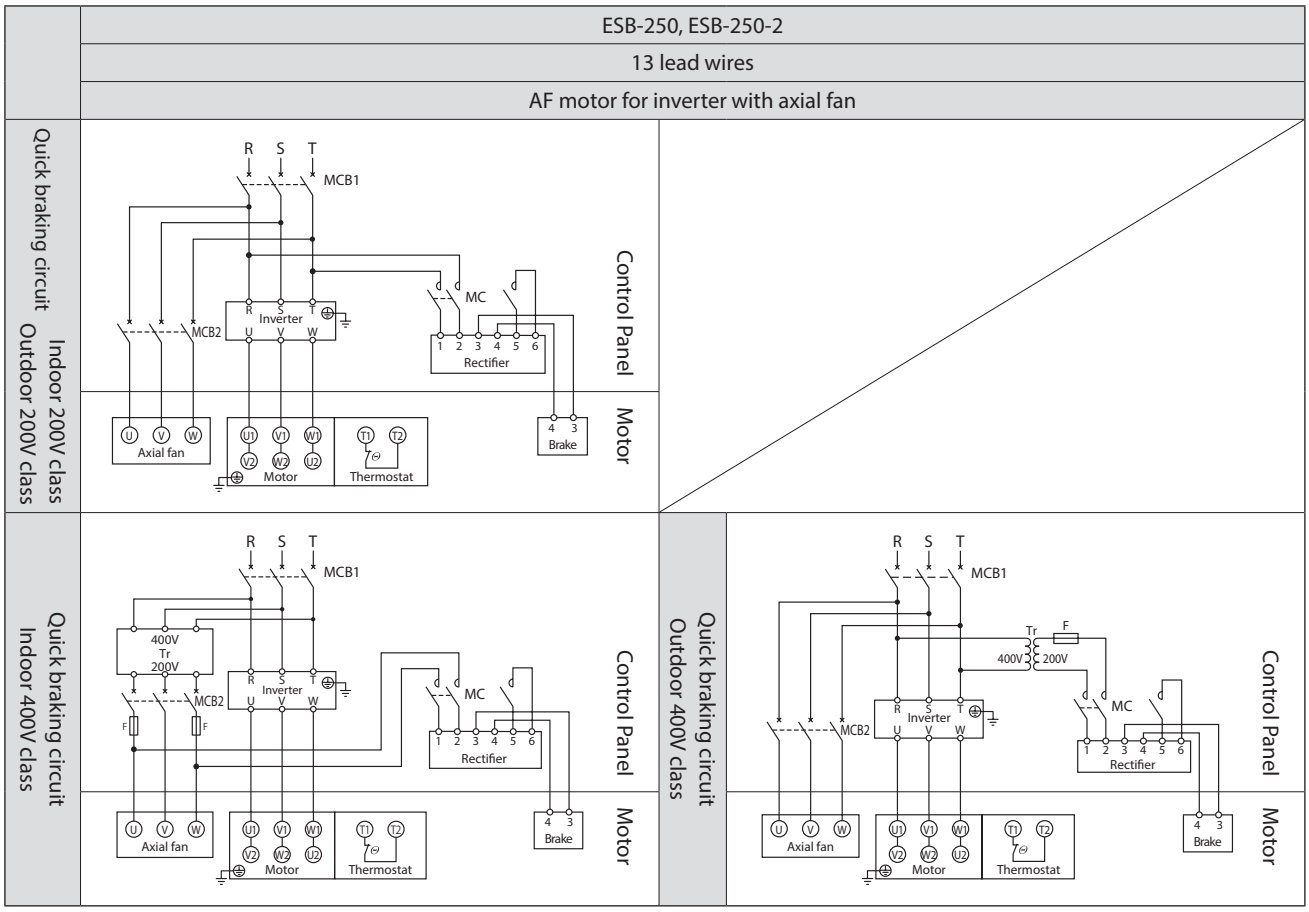


MC: Electromagnetic contactor
MCB: Breaker for wiring
Tr: Transformer capacity 250–600VA, secondary voltage 200–220V
F: Fuse 3–5A

Customer to prepare.

- This diagram shows cases for motors with standard Japanese domestic specifications. Please consult with us for motors with overseas specifications.
- For brake types, see Table 1-6 on P7.
- Use with a quick braking circuit. For information on electromagnetic contactors for quick braking circuits, see Table 6-4 on P32.
- Rectifiers are external to the main unit. Rectifiers are made for indoor use. Install in an area where they will not come into contact with water, etc.
- The brake unit is for 200V class. For 400V class power sources, prepare a 400V/200V transformer.

- Always use the inverter's power source side for the brake power source.
- Match the opening and closing of the brake circuit's electromagnetic contactor to the timing of the inverter control.

In the case of With axial fan (totally enclosed, ventilated types), note the following items.

- Also connect a power source to the axial fan.
- For an indoor 400V class, the axial fan power source voltage will be 200V class.
- For special specifications, specifications may differ from the above. Check the manufacturing specifications.
- Connect the fan so that it rotates in the same direction as that shown on the nameplate for direction of rotation. (Normally, the air from the fan will blow in a direction from the anti-load side to the load side.)
- When the motor is shut down for a long period, also shut down the axial fan motor.
- Wire the mounted thermostat.
- Thermostat specification: Terminal symbols: T1, T2 and P1, P2 — Operating function: Normal close (b contact point)
  Operating temperature: 135℃ (for thermal class 155 (F)) — Maximum current: DC 24V, 18A; AC 230V, 13A

## 6-6 Points to Note When Using a Quick Braking Circuit

When using brakes with quick braking circuits, take note of the following items.

- Connect a varistor (protection element) to protect the quick braking circuit contact points from surge voltage generated by the brake action.
- Wire the quick braking circuit contact points to the brake power source secondary side contact points. Contact points might not be protected.
- For information on using an alternating current electromagnetic contactor for contact points for quick braking circuits, see Table 6-4.

If multiple contact points are required, note the following issues.

- Connect electromagnetic contactor contact points in serial. (See figure 6-3)
- Connect the varistor (VR) as close to the unit as possible. (See figure 6-3)

Table 6-4 Nomenclature for parts recommended when using a quick braking circuit (when using an alternating current electromagnetic contactor).

| AC voltage | Brakes | Recommended contactor nomenclature | | | | Recommended contactor Contact point capacity (DC-13 class) | | Recommended varistor (for protecting contactor contact points) | | | |
|---|---|---|---|---|---|---|---|---|---|---|---|
| | | Made by Fuji Electric FA Components & Systems Co., Ltd. | | Made by Mitsubishi Electric Corporation | | | | Varistor nomenclature | Maximum allowable circuit voltage | Varistor voltage | Power rating |
| 200V 220V | FB-01A1 | SC-05 | Serial contact points: 1 (0.7A) | S-N11 or S-N12 | Serial contact points: 1 (1.2A) | DC 110V | Minimum 0.4A | TND07V-471KB00AAA0 | AC300V | 470V (423–517V) | 0.25 W |
| | FB-02A1 | | | | | | Minimum 0.5A | | | | |
| | FB-05A1 | | | | | | | | | | |
| | FB-1D | | | | | | Minimum 0.7A | TND10V-471KB00AAA0 | | | 0.4 W |
| | FB-1E | | | | | | | | | | |
| | FB-1HE | SC-05 | Serial contact points: 2 (3.0A) | S-N11 or S-N12 | Serial contact points: 2 (3.0A) | | Minimum 1.5A | TND14V-471KB00AAA0 | | | 0.6 W |
| | FB-2E | | | | | | | | | | |
| | FB-3E | | | | | | | | | | |
| | FB-4E | | | | | | | | | | |
| | FB-5E | SC-05 | Serial contact points: 3 (4.0A) | S-N18 | Serial contact points: 3 (5.0A) | | Minimum 3.0A | | | | |
| | FB-8E | | | | | | | | | | |
| | FB-10E | SC-5-1 | Serial contact points: 3 (10A) | S-N20 or S-N21 | Serial contact points: 3 (10A) | | Minimum 5.5A | TND20V-471KB00AAA0 | | | 1.0 W |
| | FB-15E | | | | | | | | | | |
| | FB-20 | | | | | | Minimum 4.5A | | | | |
| | FB-30 | | | | | | | | | | |
| | ESB-250 ESB-250-2 | | | | | | | | | | |
| 400V 440V | FB-01A1 | SC-05 | Serial contact points: 1 (0.25A) | S-N11 or S-N12 | Serial contact points: 2 (0.5A) | DC 220V | Minimum 0.2A | TND10V-821KB00AAA0 | AC510V | 820V (738–902V) | 0.4 W |
| | FB-02A1 | SC-05 | Serial contact points: 2 (0.4A) | | | | Minimum 0.3A | | | | |
| | FB-05A1 | | | | | | | | | | |
| | FB-1D | SC-05 | Serial contact points: 3 (2.0A) | S-N11 or S-N12 | Serial contact points: 3 (2.0A) | | Minimum 0.5A | TND14V-821KB00AAA0 | | | 0.6 W |
| | FB-1E | | | | | | | | | | |
| | FB-1HE | | | | | | Minimum 1.0A | TND20V-821KB00AAA0 | | | 1.0 W |
| | FB-2E | | | | | | | | | | |
| | FB-3E | | | | | | | | | | |
| | FB-4E | | | | | | | | | | |
| | FB-5E | | | S-N18 | Serial contact points: 3 (2.0A) | | Minimum 1.5A | | | | |
| | FB-8E | | | | | | | | | | |
| | FB-10E | - | - | S-N20 or S-N21 | Serial contact points: 3 (4.0A) | | Minimum 3.0A | | | | |
| | FB-15E | | | | | | | | | | |
| | FB-20 | | | | | | Minimum 2.5A | | | | |
| | FB-30 | | | | | | | | | | |

- This recommended contactor nomenclature is for Fuji Electric FA Components & Systems Co., Ltd. and Mitsubishi Electric Corporation contactors. Products from other manufacturers are also allowable if they have equivalent capabilities.
- Recommended contactor contact point capacity indicates the case where durability regarding electronic opening and closing (service life) is approximately 2 million times (for FB-30, ESB-250 and ESB-250-2, approximately 1 million times).
- Of the recommended contactors, the Mitsubishi Electric Corporation S-N11 has one auxiliary contact point; the S-N18 has none. This applies if, for inverter drive or other reasons, two or more auxiliary contact points are required. (Other connectors in Table 6-4 have two or more auxiliary contact points.)
- This recommended varistor nomenclature is for Nippon Chemi-Con Corporation varistors. Products from other manufacturers are also allowable if they have equivalent capabilities.
- In the FB-20, FB-30, ESB-250 and ESB-250-2, a varistor for protecting the connector contact points is built in to the rectifier.

Figure 6-3 Examples of contact point connections with quick braking circuits

For FB-01A1 – FB-15E

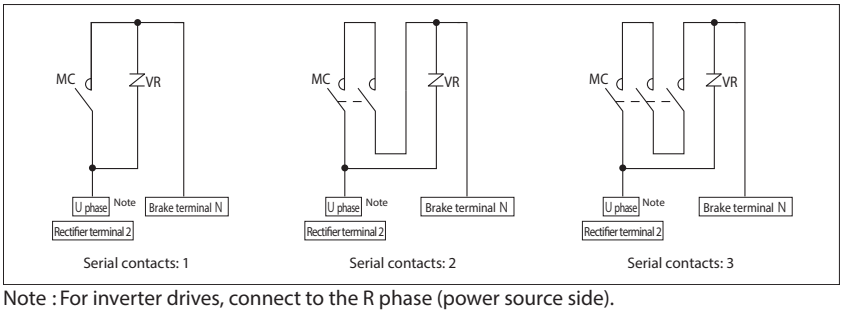


For FB-20, FB-30, ESB-250 and ESB-250-2

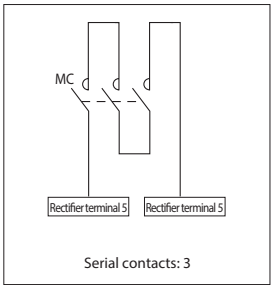


Note : For inverter drives, connect to the R phase (power source side).

## 6-7 Wiring for Motorized Trochoid Pump Motor

**⚠ CAUTION**

- When lubricating with a motorized trochoid pump, always prime before starting the main motor. Abnormal temperature rise, seizure, and other device damage may occur.

(1) Vertical frame sizes 6275, 6275DA Use a trochoid pump for independent lubrication. The pump requires a separate power source. (See Table 6-5, figure 6-4)

(2) For motorized trochoid pump wiring, see figure 6-5. Wire R-U, S-V, T-W. The pump motor rotates in the specified direction. (For Japanese domestic standard specifications. Consult with us for special specification, such as overseas specifications and motors not manufactured by Sumitomo.)

(3) Between the motor for the motorized trochoid pump and main motor, fit with interlock that satisfies the following two functions. (See figure 6-5)

[1] Start time: If the motorized trochoid pump does not activate, do not activate the main motor.

[2] While running: If for any reason the motorized trochoid pump stops, stop the main motor.

(4) To ensure good lubricating conditions, start (prime) the motorized trochoid pump at least 30 seconds before the main motor.

Table 6-5 Motorized Trochoid Pump Specifications

| Type | | | Motorized trochoid pump | | | | | | Remarks |
|---|---|---|---|---|---|---|---|---|---|
| Frame size | | Reduction ratio | Pump nomenclature | Pump motor | 50 Hz region | | 60 Hz region | | (1) Motorized trochoid pumps manufactured by Nippon Oil Pump Co., Ltd. are used as standard equipment.<br>(2) The motorized trochoid pump comes standard with a release valve (set pressure 0.29 MPa). |
| | | | | | Discharge volume (L/min) | Maximum pressure (MPa) | Discharge volume (L/min) | Maximum pressure (MPa) | |
| Vertical | 6275 | Total reduction ratio | TOP-216HB-VB-3 | 0.75kW 4P | 24.0 | 0.78 | 28.8 | 0.49 | |
| Vertical | 6275DA | Total reduction ratio | TOP-204HB-VB-3 | 0.4kW 4P | 6.0 | 1.57 | 7.2 | 1.13 | |

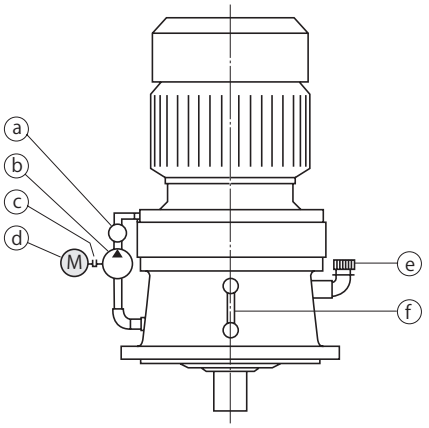


| | |
|---|---|
| a | Flow sight |
| b | Motorized trochoid pump |
| c | Coupling |
| d | Motor (for trochoid pump) |
| e | Filler plug |
| f | Oil gauge |

Figure 6-4 Structural diagram of machine with motorized trochoid pump

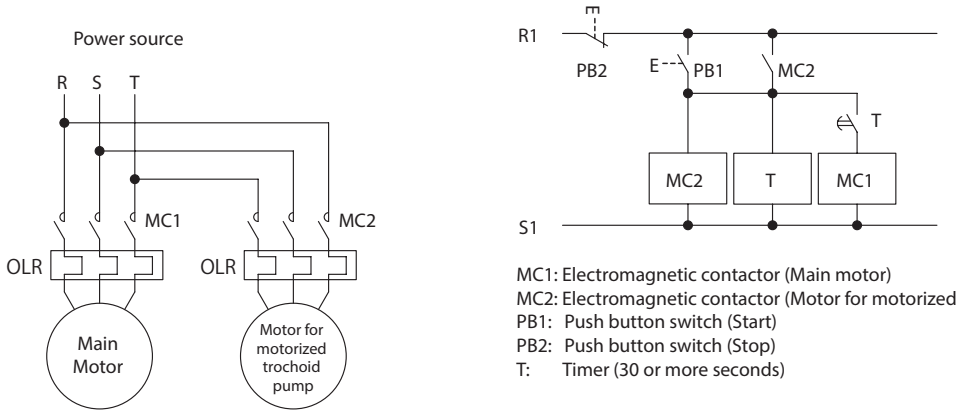


MC1: Electromagnetic contactor (Main motor)
MC2: Electromagnetic contactor (Motor for motorized trochoid pump)
PB1: Push button switch (Start)
PB2: Push button switch (Stop)
T: Timer (30 or more seconds)

Figure 6-5 Motorized trochoid pump circuit diagram

# 7. Operation

**⚠ DANGER**

- Do not approach or touch rotating parts (slow speed shaft, etc.) during operation; otherwise loose clothing may became caught in these rotating parts and cause serious injury or death.
- When the power supply is interrupted, be sure to turn off the power switch. Restoration of power may cause electric shock, personal injury, or damage to the equipment.
- Do not operate the unit with the terminal box cover removed. Return the terminal box cover to the original position after maintenance, in order to prevent electric shock.
- Do not operate the machine while the brake is released by the manual brake release bolt; otherwise, falling, going out of control, or damage to the equipment may result.

**⚠ CAUTION**

- Do not put fingers or foreign objects into the opening of the products; otherwise, electric shock, injury, fire, or damage to the equipment may result.
- The products becomes very hot during operation. Touching the unit may result in burns.
- Do not loosen the oil filler plug during operation; otherwise, hot, splashing lubricant may cause burns.
- If any abnormality occurs during operation, stop operation immediately; otherwise, electric shock, personal injury, or fire may result.
- Do not operate the unit in excess of the load rating; otherwise, personal injury, or damage to the equipment may result.

## 7-1 Items to Check Before Operation

After installation and wiring are completed, check the following items before operating.

- Is the wiring correct?
- Is the unit properly coupled with the driven machine?
- Are mounting bolts tightened firmly?
- Is the direction of rotation as required?
- Does the oil level in an oil-lubricated model reach the top red line of the oil gauge when the unit is at rest?

After confirming these items, operate without a load and gradually apply a load. Check the items shown in Table 7-1.

## 7-2 Items to Check During Operation

Table 7-1 Items to Check During Operation

| | |
|---|---|
| Is abnormal sound or vibration generated? | - Is the housing deformed because the installation surface is not flat?<br>- Is insufficient rigidity of the installation base generating resonance?<br>- Is the shaft center aligned with the driven machine?<br>- Is the vibration of the driven machine transmitted to the gearmotor or reducer? |
| Is the surface temperature abnormally high? | - Is the voltage rise or drop substantial?<br>- Is the ambient temperature too high?<br>- Does the current flowing to the gearmotor exceed the rated current shown on the nameplate? |
| Is the oil signal active?<br>(When the lubrication is of the plunger pump type.) | - If the balls in the oil signal are not moving up or down, there may be a lubrication problem. |

If any abnormalities are found, immediately stop operation and contact the nearest authorized service station.

## 7-3 Brake Torque and Activation Delay Time

The table below shows standard specification brake types, their brake torque, and their relationship to brake activation delay time.

Table 7-2 Brake Torque and Activation Delay Time

| Brake type | Motor capacity (kW) | | | | | | | Brake torque (Dynamic friction torque) (N·m) | | Brake Activation Delay Time (s) | | |
|---|---|---|---|---|---|---|---|---|---|---|---|---|
| | 3-phase motor | Premium efficiency, 3-phase motor | | AF motor for inverter | | Premium-efficiency, 3-phase motor for inverter | HIgh-efficiency, 3-phase motor | | | Normal braking circuit (Simultaneous turn-off circuit) | Normal braking circuit for inverter (Simultaneous turn-off circuit) | Quick braking circuit |
| | 4P | 4P | 6P | 4P | 6P | 4P | 4P | | | | | |
| FB-01A1 | 0.1 | — | — | — | — | — | — | 1.0 | | 0.15 – 0.2 | 0.08 – 0.12 | 0.015 – 0.02 |
| FB-02A1 | 0.2 0.25 | — | — | 0.1 | — | — | — | 2.0 | | | | |
| FB-05A1 | 0.4 | — | — | 0.2 | — | — | 0.2 | 4.0 | | 0.1 – 0.15 | 0.03 – 0.07 | 0.01 – 0.015 |
| FB-1D | 0.55 | — | — | 0.4 | — | — | 0.4 | 7.5 | | 0.2 – 0.3 | 0.1 – 0.15 | 0.01 – 0.02 |
| FB-1E | — | 0.75 | — | — | — | 0.75 | — | 7.5 | | 0.25 – 0.45 | 0.15 – 0.25 | 0.01 – 0.03 |
| FB-1HE | — | 1.1 | — | — | — | — | — | 11 | | 0.45 – 0.65 | 0.25 – 0.35 | |
| FB-2E | — | 1.5 | — | — | — | 1.5 | — | 15 | | 0.35 – 0.55 | 0.15 – 0.25 | |
| FB-3E | — | 2.2 | — | — | — | 2.2 | — | 22 | | 0.75 – 0.95 | 0.4 – 0.5 | 0.02 – 0.04 |
| FB-4E | — | 3.0 | — | — | — | — | — | 30 | | 0.65 – 0.85 | 0.3 – 0.4 | |
| FB-5E | — | 3.7 | — | — | — | 3.7 | — | 40 | | 1.1 – 1.3 | 0.4 – 0.5 | |
| FB-8E | — | 5.5 | — | — | — | 5.5 | — | 55 | | 1.0 – 1.2 | 0.3 – 0.4 | |
| FB-10E | — | 7.5 | — | — | — | 7.5 | — | 80 | | 1.8 – 2.0 | 0.6 – 0.7 | |
| FB-15E | — | 11 | — | — | — | 11 | — | 110 | | 1.6 – 1.8 | 0.5 – 0.6 | |
| FB-20 | — | 15 | — | — | — | 15 | — | 150 | | — | — | 0.06 – 0.14 |
| FB-30 | — | — | 15 | — | — | — | — | 220 | | — | — | 0.03 – 0.11 |
| | — | 18.5 | 18.5 | — | — | 18.5 | — | 190 | | | | |
| | — | 22 | 22 | — | — | 22 | — | 220 | | | | |
| | — | 30 | — | — | — | 30 | — | 200 | | | | |
| ESB-250 (Horizontal) | — | — | — | 30 | 18.5 | — | — | Horizontal | 212 | — | — | 0.065 |
| | | | | | | | | Vertical | 195 | | | |
| | — | 37 | — | 37 | 22 | 37 | — | Horizontal | 266 | | | |
| | | | | | | | | Vertical | 244 | | | |
| ESB-250-2 (Vertical) | — | 45 | 30 | — | 30 | 45 | — | Horizontal | 320 | | | |
| | | | | | | | | Vertical | 292 | | | |
| | — | — | 37 | — | — | — | — | Horizontal | 372 | | | |
| | | | | | | | | Vertical | 390 | | | |

Note : 1. Brake type may differ depending on specification. Check the nameplate.

2. Brake torque will change according to operating environment, operating conditions, the condition of the friction surface, etc. In particular, brake torque may not be at the prescribed level for initial operation, and after a long period of inactivity. In such a case turn the brake on and off under as light load as possible to contact the brake's friction surfaces.

3. Brake activation delay time will change according to the brake's wiring circuit. Select the optimum circuit for the application.

# 8. Daily Inspection and Maintenance

## ⚠ DANGER

- Do not handle the unit when cables are live. Be sure to turn off the power when operating on the unit; otherwise, electric shock may result.
- Do not approach or touch any rotating parts (slow speed shaft, etc.) during run-time maintenance or inspection of the unit; loose clothing may become caught in these rotating parts and cause serious injury or death.
- Customers must not disassemble or modify For explosion proof motors; otherwise, explosion, ignition, electric shock, or damage to the equipment may result.
- The lead-in condition of an For explosion proof motors, shall conform to the facilities electrical codes, extension regulations, and explosion-proofing guide, as well as the maintenance manual; Additionally, do not open the terminal box cover while operating. otherwise, explosion, ignition, electric shock, or damage to the equipment may result.
- Do not operate the machine while the brake is released by the manual brake release bolt; otherwise, falling, going out of control, or damage to the equipment may result.

## ⚠ CAUTION

- Do not put fingers or foreign objects into the opening of the products; otherwise, electric shock, injury, fire, or damage to the equipment may result.
- The products becomes very hot during operation. Touching the unit with bare hands may result in serious burns.
- Do not touch the terminals when measuring insulation resistance; otherwise, electric shock may result.
- Do not operate the unit without a safety cover (removed during inspection) in place to shield rotating parts; otherwise loose clothing may became caught in these rotating parts and cause serious injury or death.
- Promptly identify and correct, according to instructions in this maintenance manual, any abnormalities observed during operation. Do not operate until the cause for the abnormality is understood, and the abnormality is corrected.
- Change lubricant according to the maintenance manual instructions. Be sure to use factory recommended lubricant.
- Only install, move, or transport oil-lubricated models with lubricating oil removed. Moving with lubricating oil in the machine may cause oil to escape from the air vent, etc.
- Do not change lubricant during operation or immediately after stopping operation; otherwise, burns may result.
- Supply/discharge grease to/from the motor bearing according to the maintenance manual instructions. Avoid contact with rotating parts; otherwise, injury may result.
- Do not operate damaged gearmotors or reducers; otherwise, injury, fire, or damage to the equipment may result.
- We cannot assume any responsibility for damage or injury resulting from an unauthorized modification by a customer, as it is outside the scope of the warranty.
- Dispose of products lubricant as general industrial waste.
- When measuring the insulation resistance of an For explosion proof motors, confirm that there is no gas or other vaporized explosive substance around the unit in order to prevent explosion or ignition.
- Changing brake linings requires experience. Consult with the nearest authorized service station.
- Brake torque will change with operation environment and conditions, the condition of the friction surface, and other factors. In particular, brake torque may not be at the prescribed level for initial operation, and after a long period of inactivity. In such a case turn the brake on and off under as light load as possible to contact the brake's friction surfaces.

## 8-1. Daily Inspection

Make certain to carry out daily inspections in accordance with Table 8-1. Neglecting inspections is a source of trouble.

Table 8-1 Daily Inspection

| Inspection item | | Inspection detail |
|---|---|---|
| Current value | | Is the current no greater than the rated value shown on the nameplate? |
| Noise | | Are there unusual noises, or are there extreme changes in the noises? |
| Vibration | | Is there abnormally large vibration? Are there extreme changes? |
| Surface temperature | | Is surface temperature unusually high? Has there been a sudden rise?<br>(Temperature rises during operation will differ according to model and type. However the difference between the gear unit surface temperature and the environment temperature should be approximately 60℃. (For Frame size 6060 – 6125, and SK series approximately 40℃) In this case, there is no particular problem if fluctuation is slight.) |
| Oil level (Oil lubricated machines) | At rest | Is the oil level below the red line at the top of the oil gauge when the machine is at rest?<br>If when at rest the oil level is below the top red mark, fill up to the mark with lubricating oil. Do no add while the machine is running. |
| | While running | Is the oil level significantly different than the level during stable operation?<br>The bottom red mark is an auxiliary mark serving as a guideline to check oil level while the machine is running. |
| | Trochoid pump type | Are the oil signal and flow gauge working properly?<br>Their no working properly is a sign of improper reducer lubrication, due to factors including insufficient oil, pump damage and plugged pipes. Immediately stop the machine and inspect. |
| Lubricant contamination | | Is the lubricating oil contaminated?<br>To check for oil contamination, in addition to extracting oil while the machine it stopped, it is also possible to check using the oil gauge.<br>If the oil gauge is contaminated, promptly change it. |
| Oil, grease leaks | | Are oil or grease leaking from the gear unit? Are the oil seal sliding surfaces corroded? |
| Mounting bolts | | Are the mounting bolts loose? |
| Chain, V-belt | | Are the chain or V-belt loose? |

- If any abnormality is discovered during the daily inspection, take measures in accordance with "9. Troubleshooting" (P72, 73). If these actions do not remedy the issue, immediately contact the nearest authorized service station.

## 8-2 Confirmation of Lubrication Method

Please look for the relevant items and make certain to do maintenance. Neglecting maintenance is a source of trouble.

- Check Table 8-2 for the lubrication method employed by the gear unit of the model used.
- Table 8-3 lists pages that can be referenced regarding lubrication maintenance.

Table 8-2 Standard Lubrication Methods for Gear Units by Type (When driven at standard input speed)

| | Frame size | 607□SK | 608□SK | 609□SK | 610□SK | 611□SK |
|---|---|---|---|---|---|---|
| SK series | Horizontal | Long-life grease | | | | |
| | Vertical | | | | | |

| | Frame size | 613□ | 614□ | 616□ | 617□ |
|---|---|---|---|---|---|
| Low reduction ratio series | Horizontal | Oil Bath | | | |
| | Vertical | | | | |

| | Frame size | 606□ | 607□ | 608□ | 609□ | 610□ | 611□ | 612□ | 613□ | 614□ | 616□ | 617□ | 618□ | 619□ | 6205 | 6215 | 6225 | 6235 | 6245 | 6255 | 6265 | 6275 |
|---|---|---|---|---|---|---|---|---|---|---|---|---|---|---|---|---|---|---|---|---|---|---|
| Single Reduction | Horizontal | Long-life grease | | | | | | | Oil Bath | | | | | | | | | | | | | |
| | Vertical | | | | | | | | Oil Bath | Plunger pump (force-feed lubrication) | | | | | | | | | | | | |

| | Frame size | 606□DA | 607□DA | 609□DA | 610□DA | 612□DA 612□DB | 613□DA | 613□DB 613□DC | 614□DA | 614□DB 614□DC | 616□DA 616□DB | 617□DA 617□DB | 618□DA |
|---|---|---|---|---|---|---|---|---|---|---|---|---|---|
| Double Reduction | Horizontal | Long-life grease | | | | | Grease | | | | | | |
| | Vertical | | | | | | | | | | | | |

| | Frame size | 616□DC | 617□DC | 618□DB | 619□DA 619□DB | 6205DA 6205DB | 6215DA 6215DB | 6225DA 6225DB | 6235DA 6235DB | 6245DA 6245DB | 6255DA 6255DB | 6265DA | 6275DA |
|---|---|---|---|---|---|---|---|---|---|---|---|---|---|
| Double Reduction | Horizontal | Oil Bath | | | | | | | | | | | |
| | Vertical: Reduction ratio | – 473 | – 841 | – 1015 | – 2065 | – 1849 | – 2537 | | | | | | |
| | Vertical | Plunger pump (force-feed lubrication) | | | | | | | | | | | |
| | Vertical: Reduction ratio | 493 – | 1003 – | 1247 – | 2537 – | 2065 – | 3045 – | | | | | | |
| | Vertical | Grease | | | | | | | | | | | |

| | Frame size | 606□TA | 607□TA | 609□TA | 610□TA | 612□TA 612□TB | Frame sizes not listed to the left |
|---|---|---|---|---|---|---|---|
| Triple Reduction | Horizontal | Long-life grease | | | | | Grease |
| | Vertical | | | | | | |

Note : 1. ▨ Indicates universal mounting direction.
2. ■ Indicates independent lubrication using a trochoid pump. See "6-7 Wiring for Motorized Trochoid Pump Motor" (P33)
3. The symbol □ in frame size can be "0", "5" or "H".
4. For underlined frame sizes, the horizontal chain flight sludge collector specification is set to oil lubrication.
5. If input speed is not standard, consult with us.

Table 8-3 Maintenance Manual Pages that can be Referenced Regarding Lubrication Maintenance

| | Lubrication method | | | Oiling, greasing at time of purchase, prior to operation | Location of information on maintenance technique | | | |
|---|---|---|---|---|---|---|---|---|
| | | | | | Oil, grease change, replenish intervals | Recommended lubricating oil, grease | Oil fill quantity Grease supply quantity | Oil fill and drain procedures Grease supply and discharge procedures |
| Gear unit | Oil lubrication | Oil Bath | Self-lubricating | Required | 8–3 (1) P38 | 8–3 (2) P38 | 8–3 (3) P39 | 8–3 (4), (5) P39, 40 |
| | | Plunger system | force-feed lubrication | | | | | |
| | | Trochoid system | Independent lubrication | | | | | |
| | Grease lubrication | Long-life grease | Self-lubricating | Not required | 8-4 (1) P41 | 8-4 (2) P41 | 8-4 (3) P42 | 8-4 (4) P43 |
| | | Other than long-life grease | | | | | | |
| Motor bearing unit | Grease lubrication | —— | Self-lubricating | Not required | 8-6 (1) P44 | 8-6 (2) P45 | 8-6 (1) P44 | 8-6 (3) P45 |

Note: For plunger pump type (force-feed lubrication) models, in the case that the slow speed shaft does not rotate continuously (example: the slow speed shaft only rotates 90° or less), consult with us. As Figure 10-2 on P74 shows, plunger pump [40] is driven by cam [47] on the slow speed shaft unit. If the machine is not driven at a continuous, standard input speed, consideration must be made for providing sufficient lubrication to the reducer.

## 8-3 Oil Supply and Oil Change for Oil Lubricated Gear Units

### (1) Oil Change Interval

Table 8-4 Lubricating Oil Inspection and Change Intervals

| | Change Interval | | Operating Condition |
|---|---|---|---|
| Oil supply | Time of purchase | | – |
| Oil change | First time | After 500 hours or 6 months, whichever comes first. | – |
| | 2nd. and subsequent times | Every 5,000 hours, or every year, whichever comes first. | Indoors, etc. at 0 to 35 °C |
| | | Every 2,500 hours, or every 6 months, whichever comes first. | Outdoors or hot locations, etc., where 0 to 35 °C cannot be maintained. |

- Oil degrades more rapidly when ambient temperature is high or changes radically, and when corrosive gases are present. In such cases confer with the lubricating oil manufacturer.

### (2) Recommended Lubricating Oil

Always use lubricating oils recommended by Sumitomo Heavy Industries as shown in Table 8-5.

Table 8-5 Recommended Lubricating Oils (Equivalent to SP type industrial high-pressure gear oil or JIS K2219)

| Ambient temperature °C | COSMO | ENEOS | | IDEMITSU | Shell | Mobil | | Gulf | CALTEX | bp |
|---|---|---|---|---|---|---|---|---|---|---|
| -10 to 5 | COSMO GEAR SE 68 | BONNOC M 68 | – | Daphne Super Gear Oil 68 | Shell Omala S2 G 68 | – | Mobilgear 600 XP 68 | Gulf EP Lubricant HD 68 | – | Energol GR-XP 68 |
| 0 to 35 | COSMO GEAR SE 100, 150 | BONNOC M 100, 150 | BONNOC TS 150 | Daphne Super Gear Oil 100, 150 | Shell Omala S2 G 100, 150 | Spartan EP 150 | Mobilgear 600 XP 100, 150 | Gulf EP Lubricant HD 100, 150 | Meropa 100, 150 | Energol GR-XP 100, 150 |
| 30 to 50 | COSMO GEAR SE 220 - 460 | BONNOC M 220 - 460 | BONNOC TS 220 - 460 | Daphne Super Gear Oil 220 - 460 | Shell Omala S2 G 220 - 460 | Spartan EP 220 - 460 | Mobilgear 600 XP 220 - 460 | Gulf EP Lubricant HD 220 - 460 | Meropa 220 - 460 | Energol GR-XP 220 - 460 |

[1] When using in winter or where the ambient temperature is relatively low, use an oil with a viscosity at the lower end of the range.

[2] For allowable lubricating oil viscosity see Table 8-6. Use within this required viscosity range.

Table 8-6 Allowable Oil Lubricant Viscosity

| | | | |
|---|---|---|---|
| Minimum allowable viscosity | For oil temperature during operation, minimum 15mm$^2$/S. | | Viscosity that will obtain required film strength under load. |
| Maximum allowable viscosity | Oil bath lubricated models | Maximum 4,300mm$^2$/S | Viscosity at which Cyclo Drive can start |
| | Force feed lubricated models | Maximum 2,200mm$^2$/S | Viscosity at which the plunger pump and motorized trochoid pump can start. |

[3] For a smooth startup use oil with a pour point at least 5℃ below ambient temperature.

[4] If operating temperature changes within a wide range use a high viscosity index oil that meets requirements [2] and [3].

[5] If regularly operating outside the ambient temperature range of 0 to 40℃ , some parts of the mechanism may need to be changed, and lubricating oil might need to be preheated, or cooled. Please consult with us.

### (3) Oil Fill Quantity

Table 8-7, 8-8 provides approximate oil fill quantities. There are individual differences in actual quantities due to difference in each structure. Make sure to check that the oil level reaches the top red line on the oil gauge, because the oil quantity may be more or less than requirement even if the oil is filled according to Table 8-7, 8-8.

Table 8-7 Approximate Oil Fill Quantity (L)

| Low reduction ratio series | Frame size | 613□ | 614□ | 616□ | 617□ |
|---|---|---|---|---|---|
| | Horizontal | 0.7 | 0.7 | 1.4 | 1.9 |
| | Vertical | 1.0 | 1.0 | 2.3 | 4.3 |

| Single Reduction | Frame size | 613□ | 614□ | 616□ | 617□ | 618□ | 619□ | 6205 | 6215 | 6225 | 6235 | 6245 | 6255 | 6265 | 6275 |
|---|---|---|---|---|---|---|---|---|---|---|---|---|---|---|---|
| | Horizontal | 0.7 | 0.7 | 1.4 | 1.9 | 2.5 | 4.0 | 5.5 | 8.5 | 10 | 15 | 16 | 21 | 29 | 56 |
| | Vertical | 1.1 | 1.1 | 1.0 | 1.9 | 2.0 | 2.7 | 5.7 | 7.5 | 10 | 12 | 15 | 35 | 43 | (60) |

| Double Reduction | Frame size | 616 □ DC | 617 □ DC | 618 □ DB | 619 □ DA | 619 □ DB | 6205DA 6205DB | 6215DA 6215DB | 6225DA 6225DB | 6235DA 6235DB | 6245DA 6245DB | 6255DA 6255DB | 6265DA | 6275DA |
|---|---|---|---|---|---|---|---|---|---|---|---|---|---|---|
| | Horizontal | 1.5 | 2.4 | 3.5 | 5.8 | 6.0 | 6.0 | 10 | 11 | 17 | 18 | 23 | 32 | 60 |
| | Vertical | 1.0 | 1.9 | 2.0 | 2.7 | 2.7 | 11 | 14 | 18 | 23 | 29 | 42 | 51 | (60) |

Table 8-8 Oil Fill Quantity (L) for Horizontal Chain Flight Sludge Collector Specification

| Double Reduction | Frame size | 613 □ DB | 613 □ DC | 614 □ DB | 614 □ DC | 616 □ DA | 616 □ DB | 617 □ DA | 617 □ DB | 618 □ DA |
|---|---|---|---|---|---|---|---|---|---|---|
| | Horizontal | 0.8 | 0.8 | 0.8 | 0.8 | 1.5 | 1.5 | 2.4 | 2.4 | 3.0 |

Note : 1. The symbol □ in frame size can be "0", "5" or "H".
2. Depending on the reduction ratio, 2-stage, vertical type will require grease.
3. Parentheses indicate use of a motorized trochoid pump
4. Horizontal type indicates the following nomenclature: PHHM, CHH, CHHM, CHHX, CHHXM, CHHJ, CHHJM. Vertical type indicates the following nomenclature: PVVM, CVV, CVVM, CVVX, CVVXM, CVVJ, CVVJM.
For other nomenclature and mounting directions that are outside standard specification, see the delivery specifications.

### (4) Oil Fill Procedure

■ Oil Fill Procedure for Horizontal Type

[1] Remove the filler plug.

[2] Pour oil into the oil filler port, keeping an eye on the oil gauge to check the oil level.

[3] Confirm that the oil level is up to the top red line on the oil gauge.

[4] Replace the filler plug.

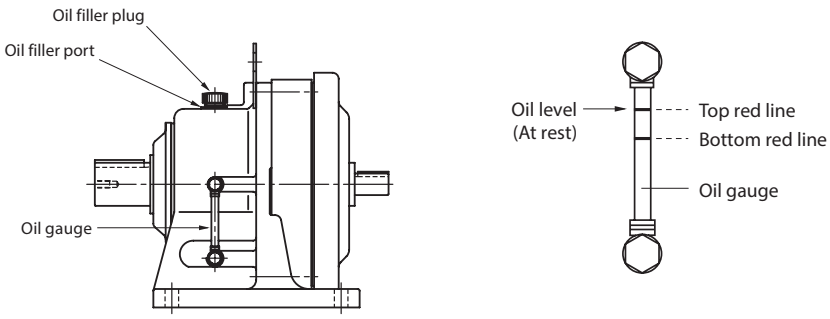


Figure 8-1 Horizontal Types

■ Oil Fill Procedure for Vertical Type

[1] Remove the filler plug. For frame sizes other than models other than frame size 6255, 6265, remove the air vent plug to release air.
[2] Pour oil into the oil filler port, keeping an eye on the oil gauge to check the oil level.
[3] Confirm that the oil level is up to the top red line on the oil gauge.
[4] For frame sizes other than models other than frame size 6255, 6265 wrap the air vent plug with sealing tape and install it.
[5] Replace the filler plug.

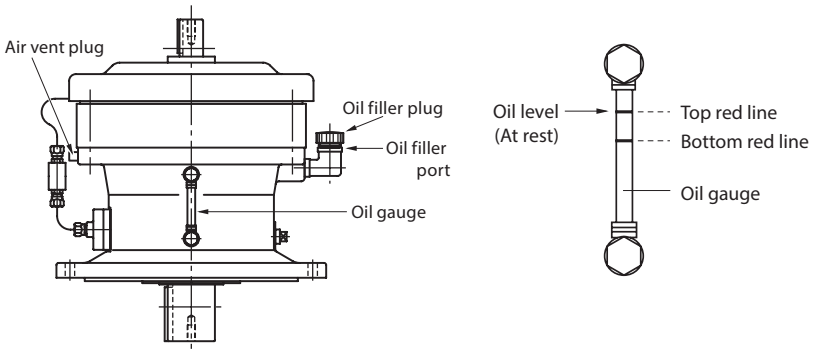


Figure 8-2 Vertical Types

- Only fill oil when the machine is stopped.
- It will take some time for high-viscosity oil to reach a uniform level. Be careful not to fill with too much oil. (If oil is filled above the top red line, churning heat may raise the temperature.)
- Use the lower red line of the oil gauge as a guideline for the oil level while the machine is running. (The oil level may drop below the bottom red line immediately after the machine starts. It will return when oil viscosity drops as the machine runs. Therefore, this is not a problem.)
- For daily oil level management see Table 8-1 on P36.

### (5) Draining Procedures

To drain the oil, remove the oil drain plug and the the plug at the bottom of the oil gauge.

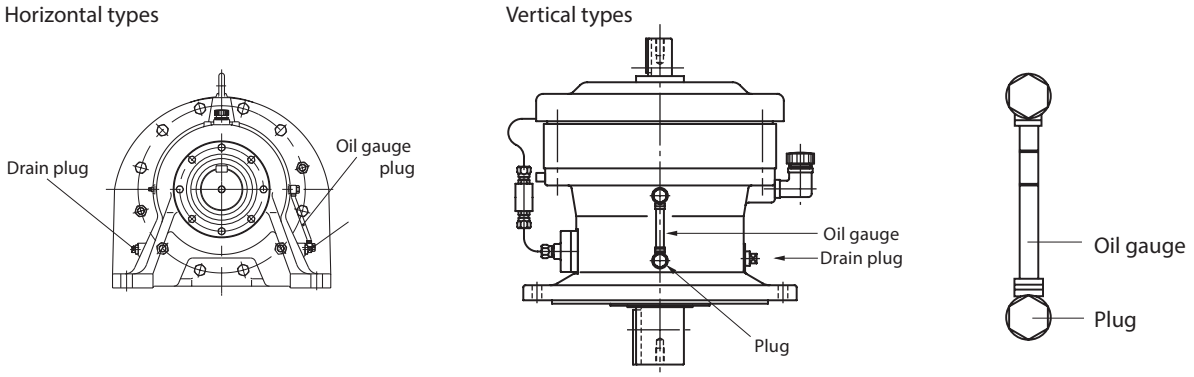


Figure 8-3 Draining Oil

### (6) Long Term Inactivity

Table 8-9 Long Term Inactivity

| | | |
|---|---|---|
| Period of Inactivity | Approximately 1 month | Before resting the machine, change to new oil and run the machine for a few minutes. |
| | 1 month or more | Before resting the machine, flush, fill with rust preventing oil and run for a few minutes under no load. |

When resuming operation after a long period of inactivity, change to new oil because the existing oil may degrade.

## 8-4 Grease Replenishment for Grease Gear Unit Models

### (1) Grease Replenishment Intervals

Table 8-10 Grease Replenishment Intervals

| Type | Grease Replenishment and Change Intervals |
|---|---|
| Long-life grease lubricated models | Although these models use long-life grease, and can run for a long time without replenishment, maintenance with disassembly after approximately 20,000 hours or 3 to 5 years will further increase lifetime. |
| Other models than Long-life grease lubricated ones | Replenish as shown in Table 8-11. Maintenance with disassembly after approximately 20,000 hours or 3 to 5 years will further increase lifetime. |

Table 8-11 Grease Replenishment Intervals (Except Long-Life Grease Lubricated Models)

| Operation Time | Replenishment Interval | Remarks |
|---|---|---|
| Less than 10 hours per day | Once every 3 – 6 months | Shorten the replenishment interval when the operating conditions are severe or the frame size is large. |
| 10 – 24 hours per day | Once every 500 – 1,000 hours | |

### (2) Recommended Grease (Grease used when shipped)

Table 8-12 Recommended Grease (Grease used when shipped)

| | Type | | Manufacturer | Description | Ambient temperature °C |
|---|---|---|---|---|---|
| [1] | SK series | Long-life grease lubricated models | Shell | Shell Alvania EP Grease R000 | -10 to 40 |
| [2] | Single Reduction | Long-life grease lubricated models | NIPPECO | BEN10-No.2 | -10 to 50 |
| | | | Mobil | UNIREX N2 | |
| [3] | Double Reduction | Models that are not lubricated with long-life grease | COSMO | COSMO GREASE DYNAMAX SH No.2 | |
| | | | Mobil | UNIREX N2 | |
| [4] | Triple Reduction | The following frame sizes when inverter- driven 613 □ DA, 613 □ DB, 613 □ DC, 614 □ DA, 614 □ DB, 614 □ DC, 616 □ DA, 616 □ DB, 617 □ DA, 617 □ DB, 618 □ DA | NIPPECO | BEN10-No.2 | |
| | | | Mobil | UNIREX N2 | |

- The symbol □ in frame size can be "0" or "5".
- Only use grease listed in Table 8-12.
- The maintenance method will differ according to product although the same grease is used.
- When regularly used in an ambient temperature outside the 0 to 40℃ range, some specifications will differ. Please consult with us.

### (3) Grease Replenishment Quantity

These tables show grease replenishment quantities. Replenish using these tables as a guideline.

Upper Row: Frame size
Lower Row: Replenishment Quantity (g)

Table 8-13 Grease Replenishment Quantity (Guidelines)

SK series

| 607 □ SK | 608 □ SK | 609 □ SK | 610 □ SK | 611 □ SK |
|---|---|---|---|---|
| Long-life grease lubricated models. Replenishment is not required. | | | | |

Single Reduction

| 606 □ | 607 □ | 608 □ | 609 □ | 610 □ | 611 □ | 612 □ |
|---|---|---|---|---|---|---|
| Long-life grease lubricated models. Replenishment is not required. | | | | | | |

Double Reduction

| 606 □ DA | 607 □ DA | 609 □ DA | 610 □ DA | 612 □ DA | 612 □ DB | | | |
|---|---|---|---|---|---|---|---|---|
| Long-life grease lubricated models. Replenishment is not required. | | | | | | | | |
| 613 □ DA | 613 □ DB | 613 □ DC | 614 □ DA | 614 □ DB | 614 □ DC | 616 □ DA | 616 □ DB | 616 □ DC |
| 8.5 – 12.5 | 20 – 30 | 40 – 60 | 8.5 – 12.5 | 20 – 30 | 40 – 60 | 20 – 30 | 40 – 60 | 85 – 125 |
| 617 □ DA | 617 □ DB | 617 □ DC | 618 □ DA | 618 □ DB | 619 □ DA | 619 □ DB | | |
| 20 – 30 | 40 – 60 | 85 – 125 | 40 – 60 | 150 – 225 | 110 – 165 | 150 – 225 | | |
| 6205DA | 6205DB | 6215DA | 6215DB | 6225DA | 6225DB | 6235DA | 6235DB | |
| 110 – 165 | 150 – 225 | 150 – 225 | 250 – 375 | 150 – 225 | 335 – 500 | 250 – 375 | 370 – 550 | |
| 6245DA | 6245DB | 6255DA | 6255DB | 6265DA | | | | |
| 250 – 375 | 370 – 550 | 335 – 500 | 500 – 750 | 500 – 750 | | | | |

Triple Reduction

| 606 □ TA | 607 □ TA | 609 □ TA | 610 □ TA | 612 □ TA | 612 □ TB | | | | |
|---|---|---|---|---|---|---|---|---|---|
| Long-life grease lubricated models. Replenishment is not required. | | | | | | | | | |
| 613 □ TA | 613 □ TB | 613 □ TC | 614 □ TA | 614 □ TB | 614 □ TC | 616 □ TA | 616 □ TB | 616 □ TC | 616 □ TD |
| 8.5 – 12.5 | 8.5 – 12.5 | 8.5 – 12.5 | 8.5 – 12.5 | 8.5 – 12.5 | 8.5 – 12.5 | 8.5 – 12.5 | 8.5 – 12.5 | 8.5 – 12.5 | 20 – 30 |
| 617 □ TA | 617 □ TB | 617 □ TC | 617 □ TD | 618 □ TA | 618 □ TB | 618 □ TC | 618 □ TD | 619 □ TA | 619 □ TB |
| 8.5 – 12.5 | 8.5 – 12.5 | 8.5 – 12.5 | 30 – 45 | 8.5 – 12.5 | 8.5 – 12.5 | 20 – 30 | 40 – 60 | 8.5 – 12.5 | 20 – 30 |
| 619 □ TC | 619 □ TD | 619 □ TE | 6205TA | 6205TB | 6205TC | 6205TD | 6205TE | 6215TA | 6215TB |
| 8.5 – 12.5 | 20 – 30 | 40 – 60 | 8.5 – 12.5 | 20 – 30 | 8.5 – 12.5 | 20 – 30 | 40 – 60 | 8.5 – 12.5 | 20 – 30 |
| 6215TC | 6215TD | 6215TE | 6215TF | 6225TA | 6225TB | 6225TC | 6225TD | 6225TE | 6225TF |
| 40 – 60 | 20 – 30 | 40 – 60 | 85 – 125 | 8.5 – 12.5 | 20 – 30 | 40 – 60 | 20 – 30 | 40 – 60 | 85 – 125 |
| 6235TA | 6235TB | 6235TC | 6235TD | 6235TE | 6245TA | 6245TB | 6245TC | 6245TD | 6245TE |
| 20 – 30 | 40 – 60 | 85 – 125 | 40 – 60 | 150 – 225 | 20 – 30 | 40 – 60 | 85 – 125 | 40 – 60 | 150 – 225 |
| 6255TA | 6255TB | 6255TC | 6255TD | 6255TE | 6265TA | 6265TB | 6275TA | 6275TB | |
| 20 – 30 | 40 – 60 | 85 – 125 | 85 – 125 | 150 – 225 | 85 – 125 | 150 – 225 | 85 – 125 | 150 – 225 | |

- The symbol □ in frame size can be "0", "5" or "H".
- When changing grease, consult with us for for filling quantity for each unit.

### (4) Procedures for Filling and Discharging

Grease replenishment procedure for grease lubricated models (excluding long- lifetime grease lubricated models)

[1] Remove the grease discharge plug from the casing.

[2] Use a grease gun to replenish through the grease fittings for the internal cover and the motor flange bracket, using the quantities of grease shown on P42, Table 8-13 as guidelines. If a grease fitting has a metal cap, remove the cap before replenishing. After replenishing replace the metal cap.

[3] Replace the grease discharge plug.

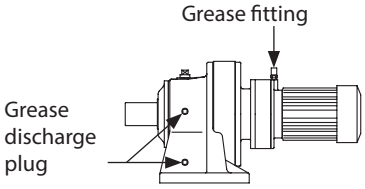


Table 8-4 Location of Grease Fill and Discharge Port (Example: Horizontal, Gearmotor, 2-Stage)

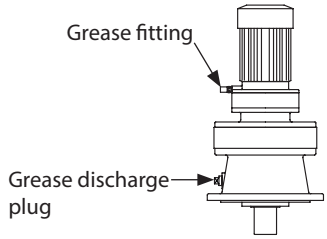


Table 8-5 Location of Grease Fill and Discharge Port (Example: Vertical, Gearmotor, 2-Stage)

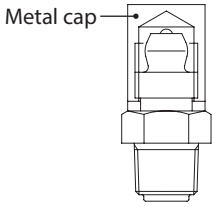


Table 8-6 Grease Fitting with Metal Cap

- Grease while the machine is running to improve grease distribution.
- In addition to being used for discharging grease, the grease discharge plug also functions as a pressure vent when replenishing grease. Make certain to remove when replenishing.
- Replenish grease slowly.
- Replenishing more than the quantity shown in Table 8-13 may cause agitation heat, which raises the temperature, and may cause grease to leak into the motor unit.
- Grease may ooze out of the grease fitting after starting the machine. In such a case replace the grease fitting with one that has a metal cap.
- Be careful when handling the metal cap for the grease fitting as dropping it from a high place is dangerous.
- Contact the nearest authorized service station concerning changing all of the grease in a grease lubricated model.

## 8-5 Main Unit Maintenance

- Although it will depend on operation conditions, maintenance with disassembly after approximately 20,000 hours or 3 to 5 years will further increase lifetime. Contact the nearest authorized service station regarding maintenance with disassembly.
- Oil seals have a lifetime. During long use natural degradation and frictional wear will reduce effectiveness. Reducer operating conditions and ambient environment will cause lifetime to widely vary. Given normal operation, (uniform load, running 10 hours per day, normal temperature) as a guideline it is recommended to change them every 1 to 3 years. If the sliding surfaces of oil seals or V-rings show signs of wear or corrosion, replace them with new ones. Because sliding surfaces for oil seals are made of carbon steel, take on-going rust prevention measures regularly not to spread rust on them by applying rustproof oil and so on, if there are exposed surfaces of steel.
- If stop and start are frequent, mounting bolts (or nuts) and ring gear housing fastening bolts (or nuts) may come loose. Periodically check for looseness as this is a source of miss-alignment, oil leakages, and load unbalance.

## 8-6 Motor Bearing Maintenance

Bearing type and maintenance technique will vary according to motor frame size. When maintaining, confirm the bearing type by referring to the nameplate and Table 8-14.

When using a vector motor, other manufacturer's motor (There are some models made by other manufacture.), refer to the operation manual for that motor.

Table 8-14 Bearing Types

| Bearing type | - Specified motor (frame size) | | Remarks |
|---|---|---|---|
| | Load side | Anti-load side | |
| Sealed bearing | - Motor frame size 160 and lower<br>- Motor frame size 180 and higher, at the same time Cyclo frame size 6225 and lower | All motors except the following. | Not constructed for filling or draining grease |
| Open bearing | - Motor frame size 180 and higher, at the same time Cyclo frame size 6235 and higher | - Motor frame size F-200L (increased safety, explosion proof), at the same time Cyclo frame size 6255 and 6265 | With grease fitting and grease discharge plug |

### (1) Sealed Bearing Maintenance

Although it will depend on operation conditions, maintenance with disassembly after approximately 20,000 hours or 3 to 5 years will further increase lifetime.

Contact the nearest authorized service station regarding maintenance with disassembly.

### (2) Open Bearing Maintenance

Check the bearing number on the nameplate, and replenish grease in accordance with with Table 8-15.

Table 8-15 Open Bearing Grease Replenishment Intervals and Replenishment Quantity

| Bearing number | Replenishment quantity (g) | Grease replenishment interval (interval (h) for speeds (r/min)) | | | | | |
|---|---|---|---|---|---|---|---|
| | | 720 r/min | 870 r/min | 980 r/min | 1165 r/min | 1450 r/min | 1750 r/min |
| NU314 | 40 | 4000 | 3500 | 3000 | 2500 | 1500 | 1000 |
| NU315 | 45 | 4000 | 3000 | 3000 | 2000 | 1500 | 1000 |
| NU316 | 50 | 4000 | 3000 | 2500 | 2000 | 1500 | 1000 |
| NU317 | 55 | 3500 | 3000 | 2500 | 2000 | 1500 | 1000 |
| NU318 | 60 | 3500 | 2500 | 2500 | 2000 | 1000 | 1000 |
| 21312 | 30 | 1500 | 1000 | 1000 | 800 | - | - |

- The replenishment quantity is the quantity to insert at each interval.
- Even in the case of intermittent operation, replenish grease approximately every 3 years.
- If the machine is rested for a long time, replenish grease immediately after resuming operation.

#### (3) Recommended Grease for Open Bearings

Table 8-16 Recommended Grease

| Ambient temperature ℃ | Open Bearing | |
|---|---|---|
| | Thermal class 130 (B) | Thermal class 155 (F) |
| | Mobil | Shell |
| −10 to 40 | UNIREX N2 | Shell Stamina Grease RL2 |

Avoid using grease other than that listed in Table 8-16.

### (4) Procedures for Filling and Discharging Grease for Open Bearings

See construction diagram 8-7.

[1] Remove the discharge port plug, and discharge the old grease. While the machine is running replenish with new grease through the grease fitting.
(Grease change will be incomplete if replenishing is done while the machine is stopped.)

[2] Run the machine for approximately 10 minutes after the grease is inserted. Then fasten the discharge port plug.

- Overfilling could cause the bearing to overheat, grease to leak and other problems. Be careful.
- Do not think that it is allowable to replenish with a large quantity to extend the replenishment interval.
- Please maintain the machine properly. Neglecting replenishment when resuming operation, or periodic replenishment when the machine is operating could lead to abnormal wear, bearing noise, bearing burnout, and other problems.

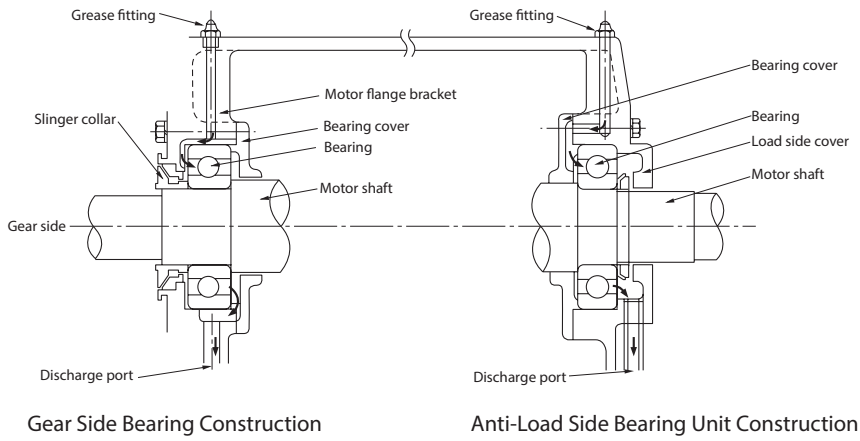


Figure 8-7 Open Bearing Unit Construction

## 8-7 Brake Maintenance and Inspection

**⚠ DANGER**

- Do not handle the unit when cables are live. Be sure to turn off the power when operating on the unit; otherwise, electric shock may result.
- When using for lifting, do not release the brake while a load is suspended; otherwise it could fall, causing an accident.
- Do not operate the machine while the brake is released by the manual brake release bolt; otherwise, falling, going out of control, or damage to the equipment may result.
- Before operation turn power on and off to check brake action; otherwise falling or running out of control could occur.
- Do not bring water or oils in contact with the brake. Brake torque degradation could cause falling or running out of control.

**⚠ CAUTION**

- After gap inspection and adjustment do not operate with the fan cover removed. otherwise loose clothing may became caught in these rotating parts and cause serious injury or death.
- Changing brake linings requires experience. Consult with the nearest authorized service station.

Given normal operation conditions, brake mechanical lifetime is quite long at 2 million times (1 million times for FB-30, ESB-250 and ESB-250-2). These conditions include the moment of inertia for the load being no greater than the moment of inertia for the brakemotor. However, please periodically inspect the brake gap (G). The brake lining wears after long hours of running time, making it impossible for the brake to release. When 2 million times is exceeded (1 million times for FB-30, ESB-250 and ESB-250-2), wear and damage to mechanical parts may cause dropping or overdrive problems.

## 8-8 Brake Construction and Gap Inspection and Adjustment

- The brake is spring activated (power-off type).
- The brake lining wears after long hours of operating the brake, making it impossible for the brake to release. Therefore please periodically inspect the brake gap (G).
- If on inspection the gap is close to the limit, adjust the gap.
- In FB-1E – FB-4E a shock absorber is inserted between the stationary core and the armature plate to reduce the noise that results from the braking action.
  When inspecting be careful that the gap gauge, other measuring tool or anything else does not damage the shock absorber or cause it to fall out.
  There is danger that if the shock absorber is damaged or falls out, brake noise will increase and the brake will not function properly.

Table 8-17 Pages Containing Information on Brake Construction and Gap Inspection and Adjustment

| Brake type | Indoor | Outdoor |
|---|---|---|
| FB-01A1, FB-02A1, FB-05A1 | P47 | P58 |
| FB-1D | P48 | P59 |
| FB-1E | P49 | P60 |
| FB-1HE, FB-2E | P50 | P61 |
| FB-3E, FB-4E | P51 | P62 |
| FB-5E, FB-8E | P52 | P63 |
| FB-10E, FB-15E | P53 | P64 |
| FB-20 | P54 | P65 |
| FB-30 | P55 | P66 |
| ESB-250, ESB-250-2 | P56 | P67 |

## ■ FB-01A1, FB-02A1, FB-05A1 (Indoor Type)

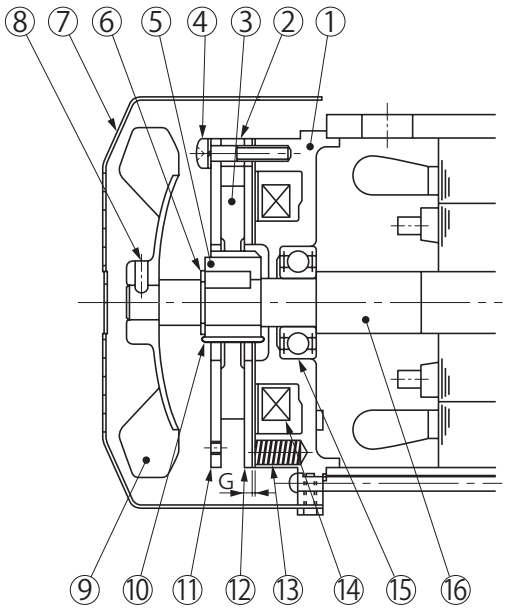


Figure 8-8

| Code | Part Name |
|---|---|
| 1 | Stationary core |
| 2 | Spacer |
| 3 | Brake lining |
| 4 | Attachment bolt |
| 5 | Boss |
| 6 | Shaft-retaining C-ring |
| 7 | Cover |
| 8 | Fan set screw |
| 9 | Fan |
| 10 | Leaf spring |
| 11 | Fixed plate |
| 12 | Armature plate |
| 13 | Spring |
| 14 | Electromagnetic coil |
| 15 | Bearing |
| 16 | Motor shaft |

Note : FB-01A1 does not come with [8][9].

### - Gap Inspection

(1) Remove the cover [7].

(2) Insert a gap gauge between the stationary core [1] and the armature plate [12], and measure the gap. Measure in 3 locations around the circumference.

(3) Adjustment is required if the gap value is near the limit.

| Gap value G (mm) | |
|---|---|
| Required value (original value) | Limit value |
| 0.2 – 0.35 | 0.5 |

### - Gap Adjustment

(1) Remove the cover [7].

(2) Loosen the fan set screw [8] and remove the fan [9].

(3) Slightly loosen the attachment bolts [4] and rotate the fixed plate [11] counterclockwise, as far as it will go. Then tighten the attachment bolts [4]. After tightening, measure the gap (G) and check to see if the gap value is between the required value and the limit. (This operation will reduce the gap by 0.3 mm.)

(4) Turn the power on and off to check brake action.

(5) Attach the fan [9] and cover [7]. Use a fan set screw [8] coated with Three Bond TB2365 (Sumitomo part number EW444WW-01), and tighten to a torque of 0.3 – 0.5 N·m.

Note : If the the optional brake release bolt is installed, disassemble after removing the release bolt.

## ■ FB-1D (Indoor Type)

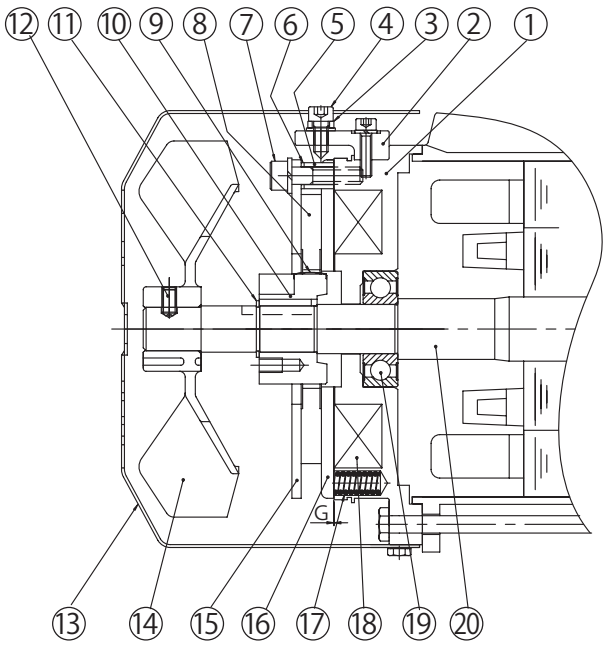


Figure 8-9

| Code | Part Name |
|---|---|
| 1 | Stationary core |
| 2 | Brake release |
| 3 | Manual release protection spacer |
| 4 | Brake release bolt |
| 5 | Spacer |
| 6 | Gap adjusting shims |
| 7 | Attachment bolt |
| 8 | Brake lining |
| 9 | Leaf spring |
| 10 | Boss |
| 11 | Shaft-retaining C-ring |
| 12 | Fan set screw |
| 13 | Cover |
| 14 | Fan |
| 15 | Fixed plate |
| 16 | Armature plate |
| 17 | Spring |
| 18 | Electromagnetic coil |
| 19 | Bearing |
| 20 | Motor shaft |

### - Gap Inspection

| Gap value G (mm) | |
|---|---|
| Required value (original value) | Limit value |
| 0.3 – 0.4 | 0.6 |

(1) Remove the brake release bolt [4] and the manual release prevention spacer [3].

(2) Remove the cover [13].

(3) Insert a gap gauge between the stationary core [1] and the armature plate [16] and measure the gap. Measure in 3 locations around the circumference.

(4) Adjustment is required if the gap value is near the limit.
(Gap adjustment shim thickness is approximately 0.2 – 0.25 mm. Adjustment cannot be made at a lower value.)

### - Gap Adjustment

(1) Remove the brake release bolt [4] and the manual release prevention spacer [3].

(2) Remove the cover [13].

(3) Remove the fan set screw [12] and remove the fan [14].

(4) Loosen the attachment bolts [7] and remove the spacers [5], gap adjustment shims [6], attachment bolts [7] and fixed plate [15] as a set. When removing the attachment bolts [7] make certain not to omit the gap adjustment shims [6].

(5) The gap adjustment shims [6] have a thickness of 0.2 – 0.25 mm. Reduce the number of shims according to the wear conditions, then reassemble the spacers [5], gap adjustment shims [6], attachment bolts [7] and the fixed plate [15] as a set.

(6) Check the gap G, and readjust the shims if there is a large difference between the gap and the required value.

(7) Turn the power on and off to check brake action.

(8) Attach the fan [14], fan set screw [12] and cover [13]. Use a fan set screw [12] coated with Three Bond TB2365 (Sumitomo part number EW445WW-01), and tighten to a torque of 0.85 – 1.05 N·m. Finally, attach the brake release bolt [4] and the manual release prevention spacer [3].

## ■ FB-1E (Indoor Type)

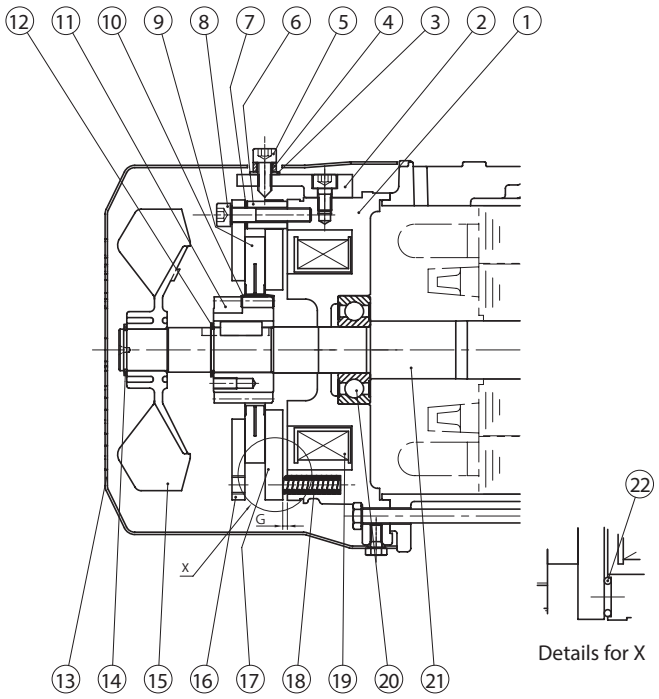


Figure 8-10

| Code | Part Name |
|---|---|
| 1 | Stationary core |
| 2 | Brake release |
| 3 | Seal washer |
| 4 | Manual release prevention spacer |
| 5 | Brake release bolt |
| 6 | Spacer |
| 7 | Gap adjusting shims |
| 8 | Attachment bolt |
| 9 | Brake lining |
| 10 | Leaf spring |
| 11 | Boss |
| 12 | Shaft-retaining C-ring |
| 13 | Cover |
| 14 | Shaft-retaining C-ring |
| 15 | Fan |
| 16 | Fixed plate |
| 17 | Armature plate |
| 18 | Spring |
| 19 | Electromagnetic coil |
| 20 | Ball bearings |
| 21 | Motor shaft |
| 22 | Shock absorber |

### - Gap Inspection

| Gap value G (mm) | |
|---|---|
| Required value (original value) | Limit value |
| 0.25 – 0.35 | 0.6 |

(1) Remove the brake release bolt [5] and the manual release prevention spacer [4].

(2) Remove the cover [13].

(3) Insert a gap gauge between the stationary core [1] and the armature plate [17] and measure the gap. Measure in 3 locations around the circumference.

(4) Adjustment is required if the gap value is near the limit.
(Gap adjustment shim thickness is approximately 0.2 – 0.25 mm. Adjustment cannot be made at a lower value.)

### - Gap Adjustment

(1) Remove the brake release bolt [5] and the manual release prevention spacer [4].

(2) Remove the cover [13].

(3) Remove the shaft-retaining C-ring [14], and remove the fan [15].

(4) Loosen the attachment bolts [8] and remove the spacers [6], gap adjustment shims [7], attachment bolts [8] and fixed plate [16] as a set. When removing the attachment bolts [8] make certain not to omit the gap adjustment shims [7] or the shock absorber [22].

(5) The gap adjustment shims [7] have a thickness of 0.2 – 0.25 mm. Reduce the number of shims according to the wear conditions, then reassemble the spacers [6], gap adjustment shims [7], attachment bolts [8] and the fixed plate [16] as a set.

(6) Check the gap G, and readjust the shims if there is a large difference between the gap and the required value.

(7) Turn the power on and off to check brake action.

(8) Attach the fan [15], shaft-retaining C-ring [14] and cover [13].

(9) Finally, attach the brake release bolt [5] and the manual release prevention spacer [4].

## ■ FB-1HE, FB-2E (Indoor Type)

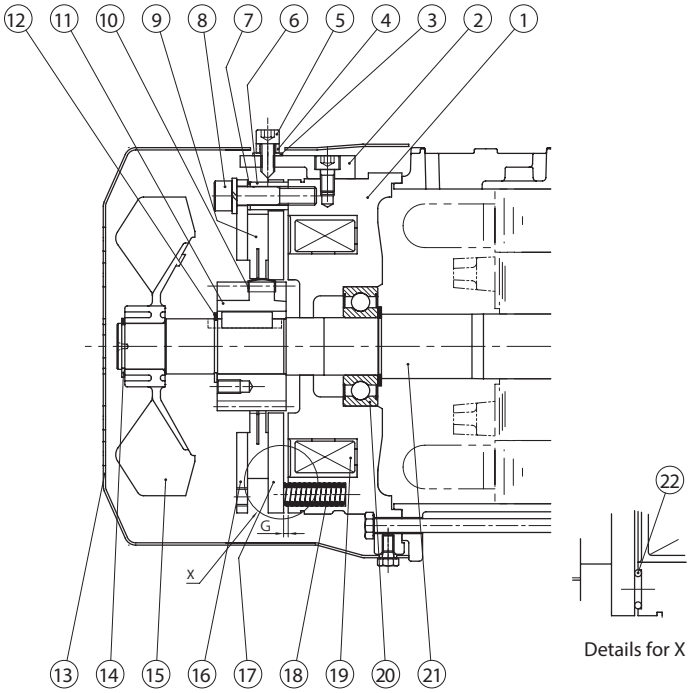


Figure 8-11

| Code | Part Name |
|---|---|
| 1 | Stationary core |
| 2 | Brake release |
| 3 | Seal washer |
| 4 | Manual release prevention spacer |
| 5 | Brake release bolt |
| 6 | Spacer |
| 7 | Gap adjusting shims |
| 8 | Attachment bolt |
| 9 | Brake lining |
| 10 | Leaf spring |
| 11 | Boss |
| 12 | Shaft-retaining C-ring |
| 13 | Cover |
| 14 | Shaft-retaining C-ring |
| 15 | Fan |
| 16 | Fixed plate |
| 17 | Armature plate |
| 18 | Spring |
| 19 | Electromagnetic coil |
| 20 | Ball bearings |
| 21 | Motor shaft |
| 22 | Shock absorber |

### - Gap Inspection

| Gap value G (mm) | |
|---|---|
| Required value (original value) | Limit value |
| 0.25 – 0.35 | 0.75 |

(1) Remove the brake release bolt [5] and the manual release prevention spacer [4].

(2) Remove the cover [13].

(3) Insert a gap gauge between the stationary core [1] and the armature plate [17] and measure the gap. Measure in 3 locations around the circumference.

(4) Adjustment is required if the gap value is near the limit.
(Gap adjustment shim thickness is approximately 0.35 – 0.45 mm. Adjustment cannot be made at a lower value.)

### - Gap Adjustment

(1) Remove the brake release bolt [5] and the manual release prevention spacer [4].

(2) Remove the cover [13].

(3) Remove the shaft-retaining C-ring [14], and remove the fan [15].

(4) Loosen the attachment bolts [8] and remove the spacers [6], gap adjustment shims [7], attachment bolts [8] and fixed plate [16] as a set. When removing the attachment bolts [8] make certain not to omit the gap adjustment shims [7] or the shock absorber [22].

(5) The gap adjustment shims [7] have a thickness of 0.35 – 0.45 mm. Reduce the number of shims according to the wear conditions, then reassemble the spacers [6], gap adjustment shims [7], attachment bolts [8] and the fixed plate [16] as a set.

(6) Check the gap G, and readjust the shims if there is a large difference between the gap and the required value.

(7) Turn the power on and off to check brake action.

(8) Attach the fan [15], shaft-retaining C-ring [14] and cover [13].

(9) Finally, attach the brake release bolt [5] and the manual release prevention spacer [4].

## ■ FB-3E, FB-4E (Indoor Type)

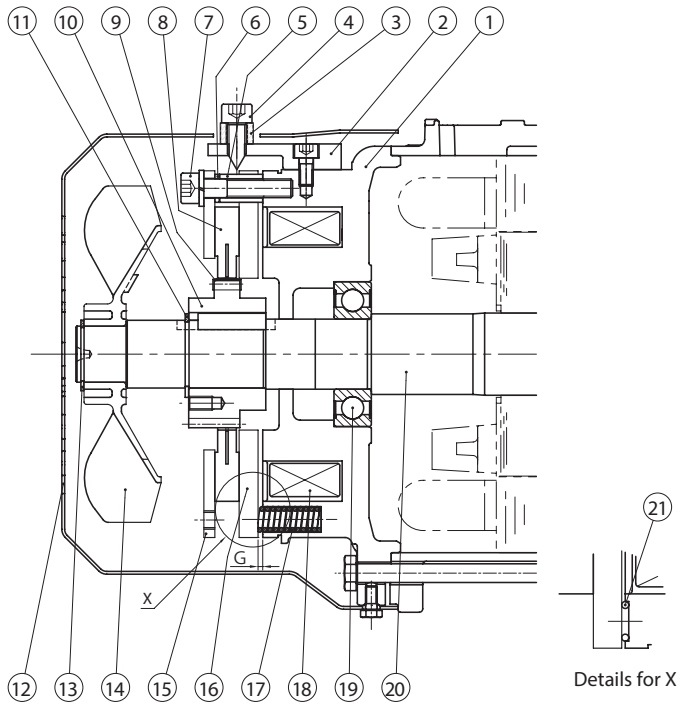


| Code | Part Name |
|---|---|
| 1 | Stationary core |
| 2 | Brake release |
| 3 | Manual release prevention spacer |
| 4 | Brake release bolt |
| 5 | Spacer |
| 6 | Gap adjusting shims |
| 7 | Attachment bolt |
| 8 | Brake lining |
| 9 | Leaf spring |
| 10 | Boss |
| 11 | Shaft-retaining C-ring |
| 12 | Cover |
| 13 | Shaft-retaining C-ring |
| 14 | Fan |
| 15 | Fixed plate |
| 16 | Armature plate |
| 17 | Spring |
| 18 | Electromagnetic coil |
| 19 | Ball bearings |
| 20 | Motor shaft |
| 21 | Shock absorber |

Figure 8-12

### - Gap Inspection

| Gap value G (mm) | |
|---|---|
| Required value (original value) | Limit value |
| 0.25 – 0.35 | 0.85 |

(1) Remove the brake release bolt [4] and the manual release prevention spacer [3].

(2) Remove the cover [12].

(3) Insert a gap gauge between the stationary core [1] and the armature plate [16] and measure the gap. Measure in 3 locations around the circumference.

(4) Adjustment is required if the gap value is near the limit.
(Gap adjustment shim thickness is approximately 0.45 – 0.55 mm. Adjustment cannot be made at a lower value.)

### - Gap Adjustment

(1) Remove the brake release bolt [4] and the manual release prevention spacer [3].

(2) Remove the cover [12].

(3) Remove the shaft-retaining C-ring [13] and the fan [14].

(4) Loosen the attachment bolts [7] and remove the spacers [5], gap adjustment shims [6], attachment bolts [7] and fixed plate [15] as a set. When removing the attachment bolts [7] make certain not to omit the gap adjustment shims [6] or the shock absorber [21].

(5) The gap adjustment shims [6] have a thickness of 0.45 – 0.55 mm. Reduce the number of shims according to the wear conditions, then reassemble the spacers [5], gap adjustment shims [6], attachment bolts [7] and fixed plate [15] as a set.

(6) Check the gap G, and readjust the shims if there is a large difference between the gap and the required value.

(7) Turn the power on and off to check brake action.

(8) Attach the fan [14], shaft-retaining C-ring [13] and cover [12].

(9) Finally, attach the brake release bolt [4] and the manual release prevention spacer [3].

## ■ FB-5E, FB-8E (Indoor Type)

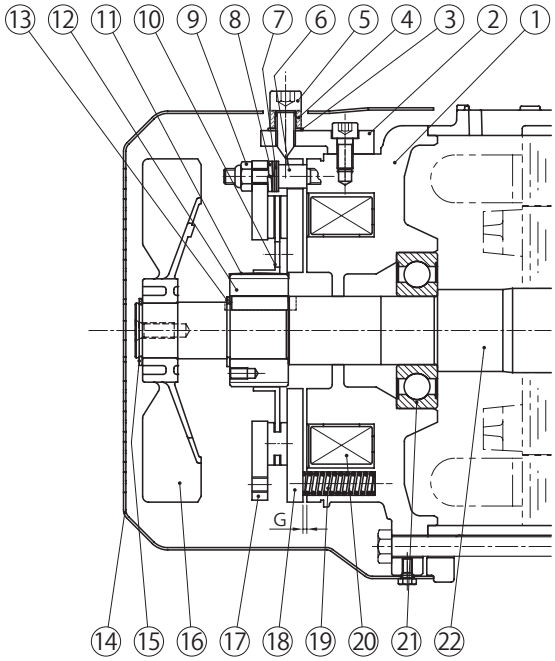


Figure 8-13

| Code | Part Name |
|---|---|
| 1 | Stationary core |
| 2 | Brake release |
| 3 | Seal washer |
| 4 | Manual release prevention spacer |
| 5 | Brake release bolt |
| 6 | Stud bolt |
| 7 | Adjusting washer |
| 8 | Spring washer |
| 9 | Gap adjusting nut |
| 10 | Brake lining |
| 11 | Leaf spring |
| 12 | Boss |
| 13 | Shaft-retaining C-ring |
| 14 | Cover |
| 15 | Shaft-retaining C-ring |
| 16 | Fan |
| 17 | Fixed plate |
| 18 | Armature plate |
| 19 | Spring |
| 20 | Electromagnetic coil |
| 21 | Ball bearings |
| 22 | Motor shaft |

### - Gap Inspection

(1) Remove the brake release bolt [5] and the manual release prevention spacer [4].

(2) Remove the cover [14].

(3) Insert a gap gauge between the stationary core [1] and the armature plate [18] and measure the gap. Measure in 3 locations around the circumference.

(4) Adjustment is required if the gap value is near the limit.

| Gap value G (mm) | |
|---|---|
| Required value (original value) | Limit value |
| 0.35 – 0.45 | 1.0 |

### - Gap Adjustment

(1) Remove the brake release bolt [5] and the manual release prevention spacer [4].

(2) Remove the cover [14].

(3) Insert a gap gauge between the stationary core [1] and the armature plate [18] and rotate to the right the gap adjusting nuts [9] that are attached to ends of the stud bolts [6]. If large adjustments to the gap are not possible, decrease the number of adjusting washers [7]. There are 3 gap adjusting nuts [9]. Adjust these in turn so that 3 positions on the circumference are uniformly at the required gap.

(4) Turn the power on and off to check brake action.

(5) Attach the cover [14].

(6) Finally, attach the brake release bolt [5] and the manual release prevention spacer [4].

## ■ FB-10E, FB-15E (Indoor Type)

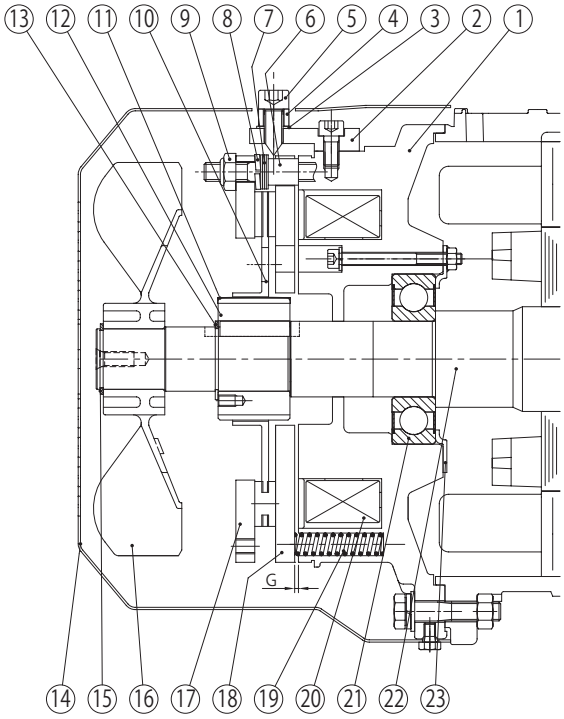


Figure 8-14

| Code | Part Name |
|---|---|
| 1 | Stationary core |
| 2 | Brake release |
| 3 | Seal washer |
| 4 | Manual release prevention spacer |
| 5 | Brake release bolt |
| 6 | Stud bolt |
| 7 | Adjusting washer |
| 8 | Spring washer |
| 9 | Gap adjusting nut |
| 10 | Brake lining |
| 11 | Leaf spring |
| 12 | Boss |
| 13 | Shaft-retaining C-ring |
| 14 | Cover |
| 15 | Shaft-retaining C-ring |
| 16 | Fan |
| 17 | Fixed plate |
| 18 | Armature plate |
| 19 | Spring |
| 20 | Electromagnetic coil |
| 21 | Ball bearings |
| 22 | Motor shaft |
| 23 | Bearing cover |

### - Gap Inspection

(1) Remove the brake release bolt [5] and the manual release prevention spacer [4].

(2) Remove the cover [14].

(3) Insert a gap gauge between the stationary core [1] and the armature plate [18] and measure the gap. Measure in 3 locations around the circumference.

(4) Adjustment is required if the gap value is near the limit.

| Gap value G (mm) | |
|---|---|
| Required value (original value) | Limit value |
| 0.35 – 0.45 | 1.2 |

### - Gap Adjustment

(1) Remove the brake release bolt [5] and the manual release prevention spacer [4].

(2) Remove the cover [14].

(3) Insert a gap gauge between the stationary core [1] and the armature plate [18] and rotate to the right the gap adjusting nuts [9] that are attached to ends of the stud bolts [6]. If large adjustments to the gap are not possible, decrease the number of adjusting washers [7]. There are 3 adjusting nuts [9]. Adjust these in turn so that 3 positions on the circumference are uniformly at the required gap.

(4) Turn the power on and off to check brake action.

(5) Attach the cover [14].

(6) Finally, attach the brake release bolt [5] and the manual release prevention spacer [4].

## ■ FB-20 (Indoor Type)

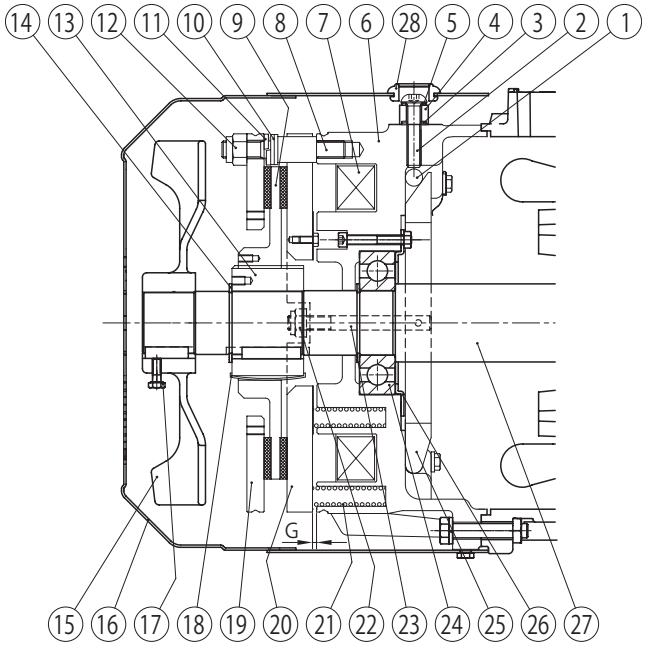


Figure 8-15

| Code | Part Name |
|---|---|
| 1 | Roller |
| 2 | Brake release bolt |
| 3 | Rubber packing |
| 4 | Manual release prevention spacer |
| 5 | Seal washer |
| 6 | Stationary core |
| 7 | Electromagnetic coil |
| 8 | Stud bolt |
| 9 | Brake lining |
| 10 | Adjusting washer |
| 11 | Spring washer |
| 12 | Gap adjusting nut |
| 13 | Boss |
| 14 | Shaft-retaining C-ring |
| 15 | Fan |
| 16 | Cover |
| 17 | Fan set screw |
| 18 | Leaf spring |
| 19 | Fixed plate |
| 20 | Armature plate |
| 21 | Spring |
| 22 | Nut |
| 23 | Tap-end stud |
| 24 | Ball bearings |
| 25 | Release lever |
| 26 | Bearing cover |
| 27 | Motor shaft |
| 28 | Grommet |

### - Gap Inspection

(1) Remove the grommet [28] and cover [16].

(2) Insert a gap gauge between the stationary core [6] and the armature plate [12], and measure the gap. Measure in 3 locations around the circumference.

(3) Adjustment is required if the gap value is near the limit.

| Gap value G (mm) | |
|---|---|
| Required value (original value) | Limit value |
| 0.6 – 0.7 | 1.5 |

### - Gap Adjustment

(1) Remove the grommet [28] and cover [16].

(2) Insert a gap gauge between the stationary core [6] and the armature plate [20] and rotate to the right the gap adjusting nuts [12] that are attached to ends of the stud bolts [8]. If large adjustments to the gap are not possible, decrease the number of adjusting washers [10]. There are 3 gap adjusting nuts [12]. Adjust these in turn so that 3 positions on the circumference are uniformly at the required gap.

(3) Turn the power on and off to check brake action.

(4) Attach the cover [16] and grommet [28].

## ■ FB-30 (Indoor Type)

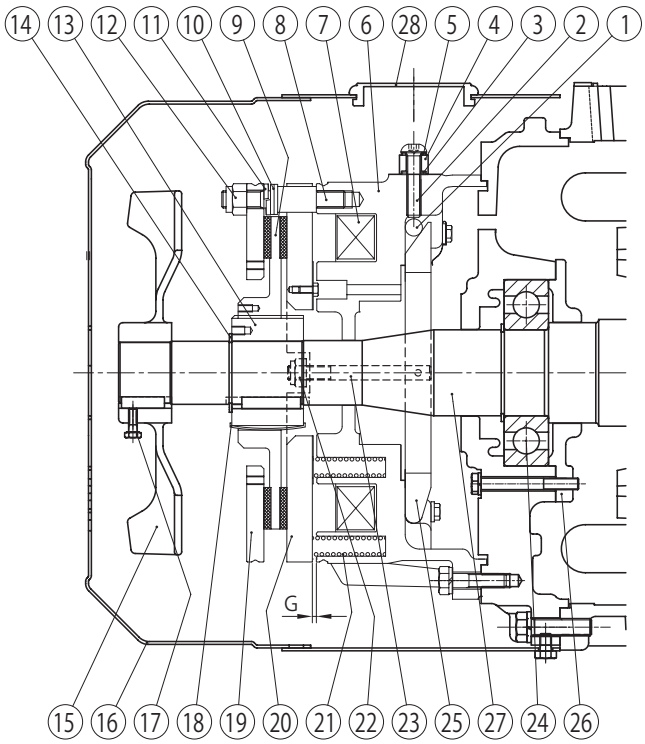


Figure 8-16

| Code | Part Name |
|---|---|
| 1 | Roller |
| 2 | Brake release bolt |
| 3 | Rubber packing |
| 4 | Manual release prevention spacer |
| 5 | Seal washer |
| 6 | Stationary core |
| 7 | Electromagnetic coil |
| 8 | Stud bolt |
| 9 | Brake lining |
| 10 | Adjusting washer |
| 11 | Spring washer |
| 12 | Gap adjusting nut |
| 13 | Boss |
| 14 | Shaft-retaining C-ring |
| 15 | Fan |
| 16 | Cover |
| 17 | Fan set screw |
| 18 | Leaf spring |
| 19 | Fixed plate |
| 20 | Armature plate |
| 21 | Spring |
| 22 | Nut |
| 23 | Tap-end stud |
| 24 | Ball bearings |
| 25 | Release lever |
| 26 | Bearing cover |
| 27 | Motor shaft |
| 28 | Grommet |

### - Gap Inspection

(1) Remove the grommet [28] and cover [16].

(2) Insert a gap gauge between the stationary core [6] and the armature plate [12], and measure the gap. Measure in 3 locations around the circumference.

(3) Adjustment is required if the gap value is near the limit.

| Gap value G (mm) | |
|---|---|
| Required value (original value) | Limit value |
| 0.6 – 0.7 | 1.5 |

### - Gap Adjustment

(1) Remove the grommet [28] and cover [16].

(2) Insert a gap gauge between the stationary core [6] and the armature plate [20] and rotate to the right the gap adjusting nuts [12] that are attached to ends of the stud bolts [8]. If large adjustments to the gap are not possible, decrease the number of adjusting washers [10]. There are 3 gap adjusting nuts [12]. Adjust these in turn so that 3 positions on the circumference are uniformly at the required gap.

(3) Turn the power on and off to check brake action.

(4) Attach the cover [16] and grommet [28].

## ■ ESB-250, ESB-250-2 (Indoor Type)

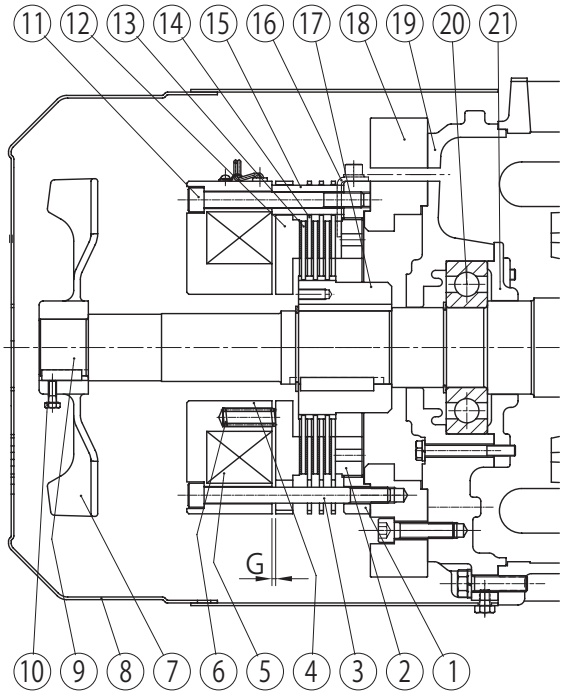


Figure 8-17

| Code | Part Name |
|---|---|
| 1 | Center ring |
| 2 | Gap adjusting screw |
| 3 | Attachment bolt |
| 4 | Field |
| 5 | Brake coil |
| 6 | Actuating spring |
| 7 | Fan |
| 8 | Cover |
| 9 | Motor shaft |
| 10 | Fan set screw |
| 11 | Lock bolt |
| 12 | Armature |
| 13 | Inner disc |
| 14 | Outer disc |
| 15 | Spacer bush |
| 16 | Stopper |
| 17 | Hub |
| 18 | Brake adapter plate |
| 19 | Opposite drive end cover |
| 20 | Opposite drive end bearing |
| 21 | Opposite drive end bearing cover |

Note : 1. Motor configuration differs for ventilated types.
2. There are 3 of [13][14] for ESB-250 (horizontal types) and 2 for ESB-250-2 (vertical types).

| Items | | Specifications |
|---|---|---|
| Rated input voltage | | AC200/220V 50/60Hz |
| Maximum input voltage | | AC240V 50/60Hz |
| Minimum input voltage | | AC170V 50/60Hz |
| Standard output voltage | Instantaneous voltage | DC180V (for AC200V input) |
| | Steady voltage | DC90V (for AC200V input) |
| Maximum output current | | DC1.8A (Steady output) |
| Over excitation time | | 0.4 – 1.2 s |
| Insulation resistance | | 100MΩ or larger (When measured with 1000V megohmmeter) |
| Insulation withstand voltage | | AC2000V for one time or more |
| Maximum frequency | Inching | When on-time 1.2 s or less: 8 cycles/min |
| | Constant | When on-time exceeds 1.2 s: 30 cycles/min |
| Allowable ambient temperature | | - 20℃ to 60℃ |

## ■ Accessory Rectifier (DC power supply unit) Model HD-110M3

Outline drawing

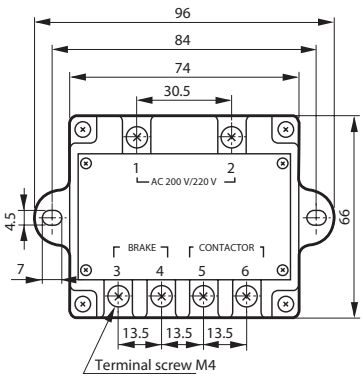


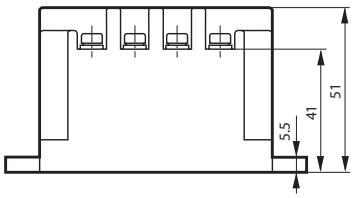


Figure 8-18

Internal circuit (diagram)

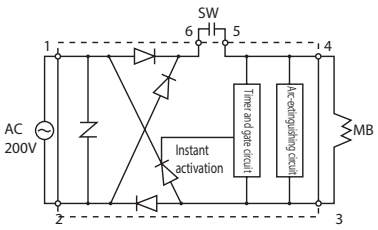


Note : 1. Model HD-110M3 is an indoor model. Take care to avoid water, etc.
2. Transformer is necessary for operation with 400V class power source. Secondary voltage is 200 – 220V.

- **Gap Inspection**

(1) Remove cover [8].

(2) Insert a gap gauge between the field [4] and armature [12] and measure the gap. Measure in 4 locations around the circumference.

(3) Adjustment is required if the gap value is near the limit.

| Gap value G (mm) | |
|---|---|
| Required value (original value) | Limit value |
| 0.7 | 2.0 |

- **Gap Adjustment**

(1) Manually release the brake following the procedure on P71.

(2) Loosen the stopper [16] on the periphery of the center ring [1], and remove it. This will free the gap adjusting screws [2]. (See Figure 8-19)

(3) Insert the gap adjusting bar (customer to prepare an angle plate. See Figure 8-21) from between the outer disc [14] and the center ring [1] into a hole for a gap adjusting screw [2].
Rotating to the left as seen from the field [4] side, will narrow the gap. (See Figure 8-20)

(4) Six attachment bolts [3] and 6 lock bolts [11] alternately pass through the space between the outer disc [14] and the center ring [1]. Rotating the gap adjusting bar will contact these bolts. There are 8 equally distributed holes for gap adjusting screws [2]. Adjust the gap G to the required value by repeating (3) each time the gap adjusting bar contacts a bolt,.

(5) Select the point where hole and screw hole are closest to the required gap and attach the stopper [16] there.

(6) After returning the manual brake release to its original state, turn power on and off to check brake action.

(7) Attach the fan [7] and cover [8]. At this time coat the fan set screw [10] with Three Bond TB2365.

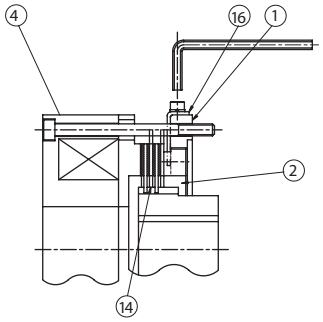


Figure 8-19

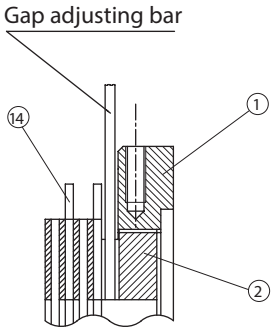


Figure 8-20

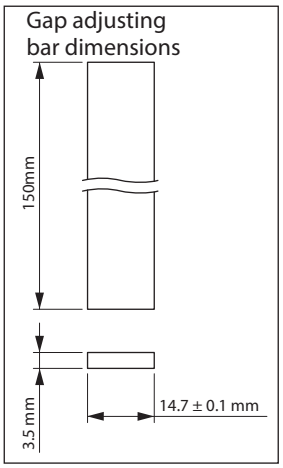


Figure 8-21

## ■ FB-01A1, FB-02A1, FB-05A1 (Outdoor Type)

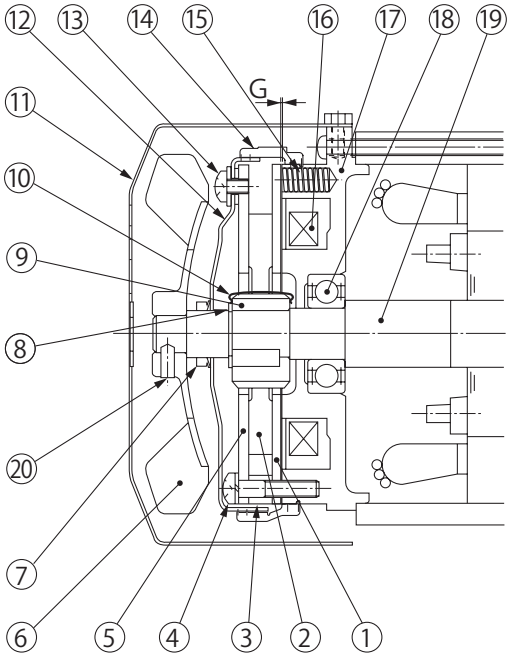


Figure 8-22

| Code | Part Name |
|---|---|
| 1 | Armature plate |
| 2 | Brake lining |
| 3 | Spacer |
| 4 | Attachment bolt |
| 5 | Fixed plate |
| 6 | Fan |
| 7 | V-ring |
| 8 | Shaft retaining C-ring |
| 9 | Boss |
| 10 | Leaf spring |
| 11 | Cover |
| 12 | Waterproof cover |
| 13 | Waterproof cover attachment bolts |
| 14 | Waterproof seal |
| 15 | Spring |
| 16 | Electromagnetic coil |
| 17 | Stationary core |
| 18 | Bearing |
| 19 | Motor shaft |
| 20 | Fan set screw |

Note : FB-01A1 does not come with [6][7][20].

### - Gap Inspection

(1) Remove the cover [11].

(2) Loosen the fan set screw [20] and remove the fan [6].

(3) Remove the waterproof seal [14].

(4) Insert a gap gauge between the stationary core [17] and the armature plate [1], and measure the gap. Measure in 3 locations around the circumference.

(5) Adjustment is required if the gap value is near the limit.

| Gap value G (mm) | |
|---|---|
| Required value (original value) | Limit value |
| 0.2 – 0.35 | 0.5 |

### - Gap Adjustment

(1) Remove the cover [11].

(2) Loosen the fan set screw [20] and remove the fan [6].

(3) Remove the waterproof seal [14].

(4) Pull off the V-ring [7].

(5) Remove the waterproof cover attachment bolts [13], and remove the waterproof cover [12].

(6) Slightly loosen the attachment bolts [4] and rotate the fixed plate [5] counter clockwise, as far as it will go. Then tighten the attachment bolts [4]. After tightening, measure the gap (G) and check to see if the gap value is between the required value and the limit. (This operation will reduce the gap by 0.3 mm.)

(7) Attach the waterproof cover [12] using the attachment bolts [13]. Attach the waterproof cover [12] so that the gap (A) between its hole and the motor shaft [19] is nearly uniform around the circumference.

(8) Clean the surface of the waterproof seal [14] to remove impurities.

(9) As shown in the construction diagram, install the waterproof seal [14] between the stationary core [17] and the waterproof cover [12]. Insert the waterproof seal [14] with its arrow mark pointing toward the load side. (Align the hole in the waterproof seal [14] for the release bolt with the position of the release bolt.) Attach the waterproof seal [14] so that its protrusion fits snuggly around the entire circumference of the groove for the stationary core [17]. Otherwise water could leak in.

(10) Turn the power on and off to check brake action.

(11) Attach the V-ring [7]. Wipe off the lip and surface near the lip of the V-ring [7], lightly coat the the lip contact surface with grease and attach. Observe the attaching dimension (B = 4.5mm).

(12) Attach the fan [7] and cover [11]. Use a fan set screw [20] coated with Three Bond TB2365 (Sumitomo part number EW444WW-01), and tighten to a torque of 0.3 – 0.5 N·m.

Note : If the the optional brake release bolt is installed, disassemble after removing the release bolt.

## ■ FB-1D (Outdoor Type)

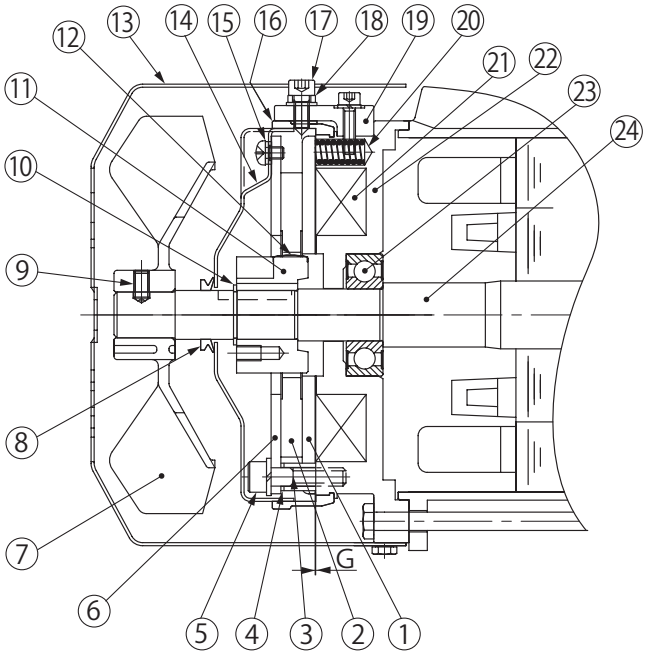


Figure 8-23

| Code | Part Name |
|---|---|
| 1 | Armature plate |
| 2 | Brake lining |
| 3 | Spacer |
| 4 | Gap adjusting shims |
| 5 | Attachment bolt |
| 6 | Fixed plate |
| 7 | Fan |
| 8 | V-ring |
| 9 | Fan set screw |
| 10 | Shaft retaining C-ring |
| 11 | Boss |
| 12 | Leaf spring |
| 13 | Cover |
| 14 | Waterproof cover |
| 15 | Waterproof cover attachment bolts |
| 16 | Waterproof seal |
| 17 | Brake release bolt |
| 18 | Manual release protection spacer |
| 19 | Brake release |
| 20 | Spring |
| 21 | Electromagnetic coil |
| 22 | Stationary core |
| 23 | Bearing |
| 24 | Motor shaft |

### - Gap Inspection

(1) Remove the brake release bolt [17] and the manual release prevention spacer [18].
(2) Remove the cover [13].
(3) Loosen the fan set screw [9] and remove the fan [7].
(4) Remove the brake release [19]. (2 Places)
(5) Remove the waterproof seal [16].
(6) Insert a gap gauge between the stationary core [22] and the armature plate [1], and measure the gap. Measure in 3 locations around the circumference.
(7) Adjustment is required if the gap value is near the limit.
(Gap adjustment shim thickness is approximately 0.2 – 0.25 mm. Adjustment cannot be made at a lower value.)

| Gap value G (mm) | |
|---|---|
| Required value (original value) | Limit value |
| 0.3 – 0.4 | 0.6 |

### - Gap Adjustment

(1) Remove the brake release bolt [17] and the manual release prevention spacer [18].
(2) Remove the cover [13].
(3) Loosen the fan set screw [9] and remove the fan [7].
(4) Pull off the V-ring [8].
(5) Remove the brake release [19]. (2 Places)
(6) Remove the waterproof seal [16].
(7) Remove the waterproof cover attachment bolts [15], and remove the waterproof cover [14].
(8) Loosen the attachment bolts [5] and remove the spacers [3], gap adjusting shims [4], attachment bolts [5], fixed plate[6] as a set. When removing the attachment bolts [5] make certain not to omit the gap adjustment shims [4].
(9) The gap adjusting shims [4] have a thickness of 0.2 – 0.25 mm. Reduce the number of shims according to the wear conditions, then reassemble the spacers [3], gap adjustment shims [4], attachment bolts [5] and the fixed plate [6] as a set.
(10) Check the gap G, and readjust the shims if there is a large difference between it and the required value.
(11) Attach the waterproof cover [14] using the attachment bolts [15]. Attach the waterproof cover [14] so that the gap (A) between its hole and the motor shaft [24] is nearly uniform.
(12) Clean the surface of the waterproof seal [16] to remove impurities.
(13) As shown in the construction diagram, install the waterproof seal [16] between the stationary core [22] and the waterproof cover [14]. Then attach the brake release [19]. Insert the waterproof seal [16] with its arrow mark pointing toward the load side. Align the hole in the waterproof seal [16] for the release bolt with the position of release bolt [17]. Attach the waterproof seal [16] so that its protrusion fits snuggly around the entire circumference of the groove for the stationary core [22]. Otherwise water could leak in.
(14) Turn the power on and off to check brake action.
(15) Attach the V-ring [8]. Wipe off the lip and surface near the lip of V-ring [8], lightly coat the the lip contact surface with grease, and attach. Observe the attaching dimension (B=4.5mm).
(16) Attach the fan [7] and cover [13]. Use a fan set screw [9] coated with Three Bond TB2365 (Sumitomo part number EW445WW-01), and tighten to a torque of 0.85 – 1.05 N·m. Finally, attach the brake release bolt [17] and the manual release prevention spacer [18].

## ■ FB-1E (Outdoor Type)

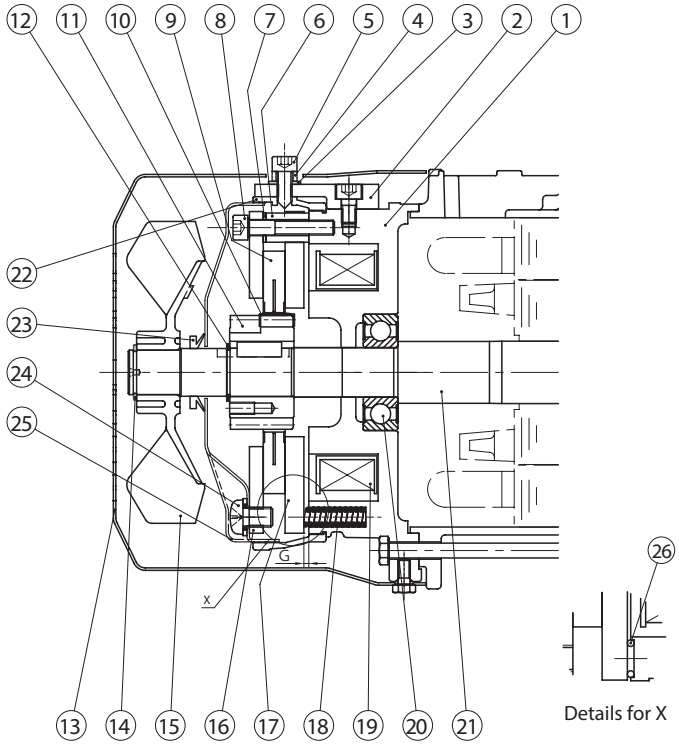


Figure 8-24

| Code | Part Name |
|---|---|
| 1 | Stationary core |
| 2 | Brake release |
| 3 | Seal washer |
| 4 | Manual release prevention spacer |
| 5 | Brake release bolt |
| 6 | Spacer |
| 7 | Gap adjusting shims |
| 8 | Attachment bolt |
| 9 | Brake lining |
| 10 | Leaf spring |
| 11 | Boss |
| 12 | Shaft-retaining C-ring |
| 13 | Cover |
| 14 | Shaft-retaining C-ring |
| 15 | Fan |
| 16 | Fixed plate |
| 17 | Armature plate |
| 18 | Spring |
| 19 | Electromagnetic coil |
| 20 | Ball bearings |
| 21 | Motor shaft |
| 22 | Waterproof seal |
| 23 | V-ring |
| 24 | Waterproof cover attachment bolts |
| 25 | Waterproof cover |
| 26 | Shock absorber |

### - Gap Inspection

(1) Remove the brake release bolt [5] and the manual release prevention spacer [4].
(2) Remove the cover [13].
(3) Remove the shaft-retaining C-ring [14], and remove the fan [15].
(4) Remove the brake release [2] (2 locations) and remove the waterproof seal [22].
(5) Insert a gap gauge between the stationary core [1] and the armature plate [17] and measure the gap. Measure in 3 locations around the circumference.
(6) Adjustment is required if the gap value is near the limit.
(Gap adjustment shim thickness is approximately 0.2 – 0.25 mm. Adjustment cannot be made at a lower value.)

| Gap value G (mm) | |
|---|---|
| Required value (original value) | Limit value |
| 0.25 – 0.35 | 0.6 |

### - Gap Adjustment

(1) Remove the brake release bolt [5] and the manual release prevention spacer [4].
(2) Remove the cover [13].
(3) Remove the shaft-retaining C-ring [14], and remove the fan [15].
(4) Pull off the V-ring [23].
(5) Remove the brake release [2] (2 locations) and remove the waterproof seal [22].
(6) Remove the waterproof cover attachment bolts [24], and remove the waterproof cover [25].
(7) Loosen the attachment bolts [8] and remove the spacers [6], gap adjustment shims [7], attachment bolts [8] and fixed plate [16] as a set. When removing the attachment bolts [8] make certain not to omit the gap adjustment shims [7] or the shock absorber [26].

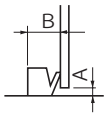


(8) The gap adjustment shims [7] have a thickness of 0.2 – 0.25 mm. Reduce the number of shims according to the wear conditions, then reassemble the spacers [6], gap adjustment shims [7], attachment bolts [8] and the fixed plate [16] as a set.
(9) Check the gap G, and readjust the shims if there is a large difference between it and the required value.
(10) Attach the waterproof cover [25] using the waterproof cover attachment bolts [24]. At this time align the cutout area on the side of the waterproof cover [25] with the brake release bolt [5]. Attach the waterproof cover [25] so that the gap (A) between its hole and the motor shaft [21] is nearly uniform.

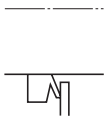

(11) Clean the surface of the waterproof seal [22] to remove impurities.
(12) As shown in the construction diagram, install the waterproof seal [22] between the stationary core [1] and the waterproof cover [25]. Then attach the brake release [2]. Insert the waterproof seal [22] with its arrow mark pointing toward the load side. Align the hole in the waterproof seal [22] for the brake release bolt with the position of the release bolt [5]. Attach the waterproof seal [22] so that its protrusion fits snuggly around the entire circumference of the groove for the stationary core [1]. (Be careful that the waterproof seal [22] does not meander. Otherwise water could leak in.)
(13) Turn the power on and off to check brake action.
(14) Attach the V-ring [23]. Wipe off the lip and surface near the lip of the V-ring [23], lightly coat the the lip contact surface with grease, and attach. Observe the attaching dimension (B=6mm).
(15) Attach the fan [15], shaft-retaining C-ring [14] and cover [13].
(16) Finally, attach the brake release bolt [5] and the manual release prevention spacer [4].

## ■ FB-1HE, FB-2E (Outdoor Type)

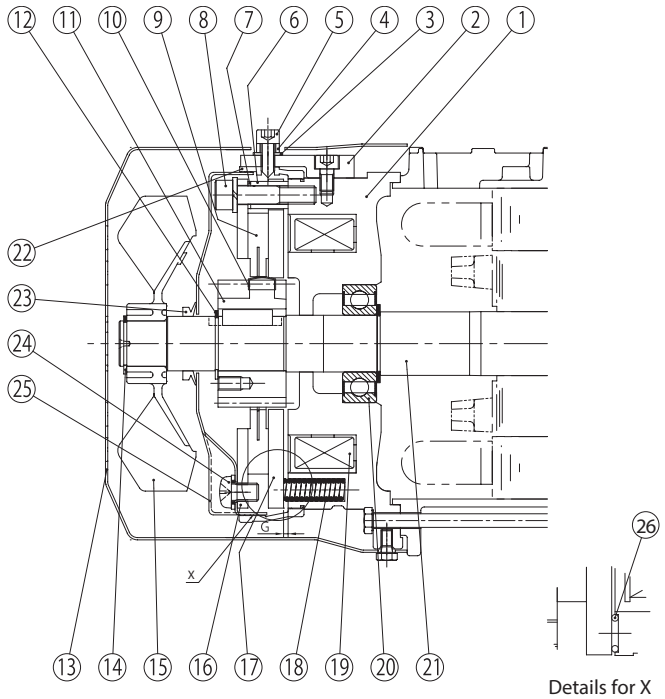


Figure 8-25

| Code | Part Name |
|---|---|
| 1 | Stationary core |
| 2 | Brake release |
| 3 | Seal washer |
| 4 | Manual release prevention spacer |
| 5 | Brake release bolt |
| 6 | Spacer |
| 7 | Gap adjusting shims |
| 8 | Attachment bolt |
| 9 | Brake lining |
| 10 | Leaf spring |
| 11 | Boss |
| 12 | Shaft-retaining C-ring |
| 13 | Cover |
| 14 | Shaft-retaining C-ring |
| 15 | Fan |
| 16 | Fixed plate |
| 17 | Armature plate |
| 18 | Spring |
| 19 | Electromagnetic coil |
| 20 | Ball bearings |
| 21 | Motor shaft |
| 22 | Waterproof seal |
| 23 | V-ring |
| 24 | Waterproof cover attachment bolts |
| 25 | Waterproof cover |
| 26 | Shock absorber |

### - Gap Inspection

(1) Remove the brake release bolt [5] and the manual release prevention spacer [4].
(2) Remove the cover [13].
(3) Remove the shaft-retaining C-ring [14], and remove the fan [15].
(4) Remove the brake release [2] (2 locations) and remove the waterproof seal [22].
(5) Insert a gap gauge between the stationary core [1] and the armature plate [17] and measure the gap. Measure in 3 locations around the circumference.
(6) Adjustment is required if the gap value is near the limit.
(Gap adjustment shim thickness is approximately 0.35 – 0.45 mm. Adjustment cannot be made at a lower value.)

| Gap value G (mm) | |
|---|---|
| Required value (original value) | Limit value |
| 0.25 – 0.35 | 0.75 |

### - Gap Adjustment

(1) Remove the brake release bolt [5] and the manual release prevention spacer [4].
(2) Remove the cover [13].
(3) Remove the shaft-retaining C-ring [14], and remove the fan [15].
(4) Pull off the V-ring [23].
(5) Remove the brake release [2] (2 locations) and remove the waterproof seal [22].
(6) Remove the waterproof cover attachment bolts [24], and remove the waterproof cover [25].
(7) Loosen the attachment bolts [8] and remove the spacers [6], gap adjustment shims [7], attachment bolts [8] and fixed plate [16] as a set. When removing the attachment bolts [8] make certain not to omit the gap adjustment shims [7] or the shock absorber [26].

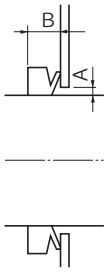


(8) The gap adjustment shims [7] have a thickness of 0.35 – 0.45 mm. Reduce the number of shims according to the wear conditions, then reassemble the spacers [6], gap adjustment shims [7], attachment bolts [8] and the fixed plate [16] as a set.
(9) Check the gap G, and readjust the shims if there is a large difference between it and the required value.
(10) Attach the waterproof cover [25] using the waterproof cover attachment bolts [24]. At this time align the cutout area on the side of the waterproof cover [25] with the brake release bolt [5]. Attach the waterproof cover [25] so that the gap (A) between its hole and the motor shaft [21] is nearly uniform.
(11) Clean the surface of the waterproof seal [22] to remove impurities.
(12) As shown in the construction diagram, install the waterproof seal [22] between the stationary core [1] and the waterproof cover [25]. Then attach the brake release [2]. Insert the waterproof seal [22] with its arrow mark pointing toward the load side. Align the hole in the waterproof seal [22] for the brake release bolt with the position of the release bolt [5]. Attach the waterproof seal [22] so that its protrusion fits snuggly around the entire circumference of the groove for the stationary core [1]. (Be careful that the waterproof seal [22] does not meander. Otherwise water could leak in.)
(13) Turn the power on and off to check brake action.
(14) Attach the V-ring [23]. Wipe off the lip and surface near the lip of the V-ring [23], lightly coat the the lip contact surface with grease, and attach. Observe the attaching dimension (B=6mm).
(15) Attach the fan [15], shaft-retaining C-ring [14] and cover [13].
(16) Finally, attach the brake release bolt [5] and the manual release prevention spacer [4].

## ■ FB-3E, FB-4E (Outdoor Type)

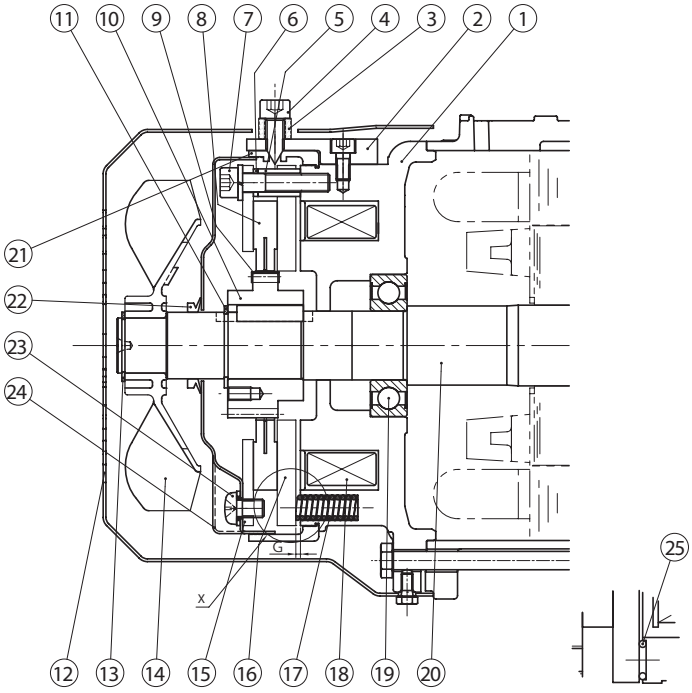


Figure 8-26

| Code | Part Name |
|---|---|
| 1 | Stationary core |
| 2 | Brake release |
| 3 | Manual release prevention spacer |
| 4 | Brake release bolt |
| 5 | Spacer |
| 6 | Gap adjusting shims |
| 7 | Attachment bolt |
| 8 | Brake lining |
| 9 | Leaf spring |
| 10 | Boss |
| 11 | Shaft-retaining C-ring |
| 12 | Cover |
| 13 | Shaft-retaining C-ring |
| 14 | Fan |
| 15 | Fixed plate |
| 16 | Armature plate |
| 17 | Spring |
| 18 | Electromagnetic coil |
| 19 | Ball bearings |
| 20 | Motor shaft |
| 21 | Waterproof seal |
| 22 | V-ring |
| 23 | Waterproof cover attachment bolts |
| 24 | Waterproof cover |
| 25 | Shock absorber |

### - Gap Inspection

(1) Remove the brake release bolt [4] and the manual release prevention spacer [5].
(2) Remove the cover [12].
(3) Remove the shaft-retaining C-ring [13] and the fan [14].
(4) Remove the brake release [2] (2 locations) and remove the waterproof seal [21].
(5) Insert a gap gauge between the stationary core [1] and the armature plate [16] and measure the gap. Measure in 3 locations around the circumference.
(6) Adjustment is required if the gap value is near the limit.
(Gap adjustment shim thickness is approximately 0.45 – 0.55 mm. Adjustment cannot be made at a lower value.)

| Gap value G (mm) | |
|---|---|
| Required value (original value) | Limit value |
| 0.25 – 0.35 | 0.85 |

### - Gap Adjustment

(1) Remove the brake release bolt [4] and the manual release prevention spacer [5].
(2) Remove the cover [12].
(3) Remove the shaft-retaining C-ring [13] and the fan [14].
(4) Pull off the V-ring [22].
(5) Remove the brake release [2] (2 locations) and remove the waterproof seal [21].
(6) Remove the waterproof cover attachment bolts [23], and remove the waterproof cover [24].
(7) Loosen the attachment bolts [7] and remove the spacers [5], gap adjustment shims [6], attachment bolts [7] and fixed plate [15] as a set. When removing the attachment bolts [7] make certain not to omit the gap adjustment shims [6] or the shock absorber [25].
(8) The gap adjustment shims [6] have a thickness of 0.45 – 0.55 mm. Reduce the number of shims according to the wear conditions, then reassemble the spacers [5], gap adjustment shims [6], attachment bolts [7] and fixed plate [15] as a set.
(9) Check the gap G, and readjust the shims if there is a large difference between it and the required value.
(10) Attach the waterproof cover [24] using the waterproof cover attachment bolts [23]. At this time align the cutout area on the side of the waterproof cover [24] with the brake release bolt [4]. Attach the waterproof cover [24] so that the gap (A) between its hole and the motor shaft [20] is nearly uniform.

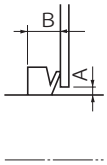


(11) Clean the surface of the waterproof seal [21] to remove impurities.
(12) As shown in the construction diagram, install the waterproof seal [21] between the stationary core [1] and the waterproof cover [24]. Then attach the brake release [2]. Align the hole in the waterproof seal [21] for the brake release bolt with the position of the release bolt [4]. Attach the waterproof seal [21] so that its protrusion fits snuggly around the entire circumference of the groove for the stationary core [1]. (Be careful that the waterproof seal [21] does not meander. Otherwise water could leak in.)

(13) Turn the power on and off to check brake action.
(14) Attach the V-ring [22]. Wipe off the lip and surface near the lip of the V-ring [22], lightly coat the the lip contact surface with grease, and attach. Observe the attaching dimension (B=6mm).
(15) Attach the fan [14], shaft-retaining C-ring [13] and cover [12].
(16) Finally, attach the brake release bolt [4] and the manual release prevention spacer [3].

## ■ FB-5E, FB-8E (Outdoor Type)

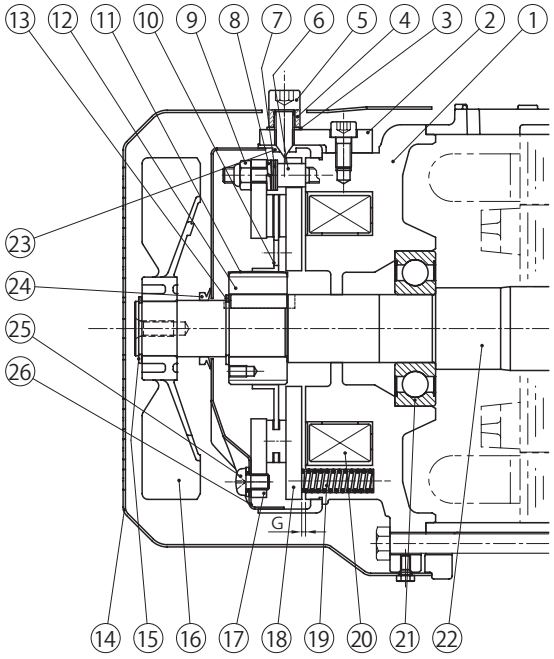


Figure 8-27

| Code | Part Name |
|---|---|
| 1 | Stationary core |
| 2 | Brake release |
| 3 | Seal washer |
| 4 | Manual release prevention spacer |
| 5 | Brake release bolt |
| 6 | Stud bolt |
| 7 | Adjusting washer |
| 8 | Spring washer |
| 9 | Gap adjusting nut |
| 10 | Brake lining |
| 11 | Leaf spring |
| 12 | Boss |
| 13 | Shaft-retaining C-ring |
| 14 | Cover |
| 15 | Shaft-retaining C-ring |
| 16 | Fan |
| 17 | Fixed plate |
| 18 | Armature plate |
| 19 | Spring |
| 20 | Electromagnetic coil |
| 21 | Ball bearings |
| 22 | Motor shaft |
| 23 | Waterproof seal |
| 24 | V-ring |
| 25 | Waterproof cover attachment bolts |
| 26 | Waterproof cover |

### - Gap Inspection

(1) Remove the brake release bolt [5] and the manual release prevention spacer [4].
(2) Remove the cover [14].
(3) Remove the shaft-retaining C-ring [15] and the fan [16].
(4) Remove the brake release [2] (2 locations) and remove the waterproof seal [23].
(5) Insert a gap gauge between the stationary core [1] and the armature plate [18] and measure the gap. Measure in 3 locations around the circumference.
(6) Adjustment is required if the gap value is near the limit.

| Gap value G (mm) | |
|---|---|
| Required value (original value) | Limit value |
| 0.35 – 0.45 | 1.0 |

### - Gap Adjustment

(1) Remove the brake release bolt [5] and the manual release prevention spacer [4].
(2) Remove the cover [14].
(3) Remove the shaft-retaining C-ring [15] and the fan [16].
(4) Pull off the V-ring [24].
(5) Remove the brake release [2] (2 locations) and remove the waterproof seal [23].
(6) Remove the waterproof cover attachment bolts [25], and remove the waterproof cover [26].
(7) Insert a gap gauge between the stationary core [1] and the armature plate [18] and rotate to the right the gap adjusting nuts [9] that are attached to ends of the stud bolts [6]. If the gap is large, and adjustments are not possible, decrease the number of adjustment washers [7]. There are 3 adjusting nuts [9]. Adjust these in turn so that 3 positions on the circumference are uniformly at the required gap.
(8) Attach the waterproof cover [26] using the waterproof cover attachment bolts [25]. At this time align the cutout area on the side of the waterproof cover [26] with the brake release bolt [5]. Attach the waterproof cover [26] so that the gap (A) between its hole and the motor shaft [22] is nearly uniform.
(9) Clean the surface of the waterproof seal [23] to remove impurities.
(10) As shown in the construction diagram, install the waterproof seal [23] between the stationary core [1] and the waterproof cover [26]. Then attach the brake release [2]. Align the hole in the waterproof seal [23] for the brake release bolt with the position of the release bolt [5]. Next, attach along the machined surfaces around the stationary core [1]. Be careful that the waterproof seal [23] does not meander. Otherwise water could leak in.)
(11) Turn the power on and off to check brake action.
(12) Attach the V-ring [24]. Wipe off the lip and surface near the lip of the V-ring [24], lightly coat the the lip contact surface with grease, and attach. Observe the attaching dimension (B=6mm).
(13) Attach the fan [16], shaft-retaining C-ring [15] and cover [14].
(14) Finally, attach the brake release bolt [5] and the manual release prevention spacer [4].

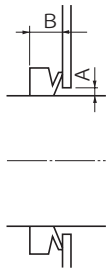

## ■ FB-10E, FB-15E (Outdoor Type)

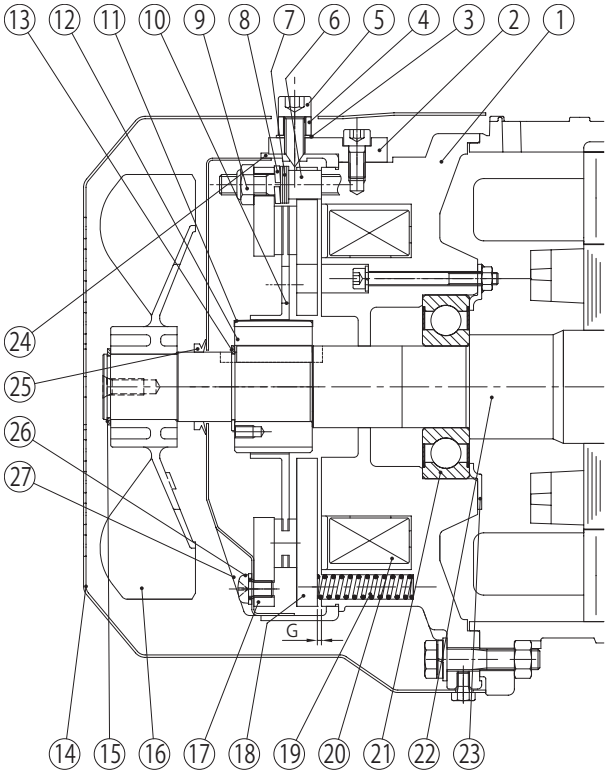


Figure 8-28

| Code | Part Name |
|---|---|
| 1 | Stationary core |
| 2 | Brake release |
| 3 | Seal washer |
| 4 | Manual release prevention spacer |
| 5 | Brake release bolt |
| 6 | Stud bolt |
| 7 | Adjusting washer |
| 8 | Spring washer |
| 9 | Gap adjusting nut |
| 10 | Brake lining |
| 11 | Leaf spring |
| 12 | Boss |
| 13 | Shaft-retaining C-ring |
| 14 | Cover |
| 15 | Shaft-retaining C-ring |
| 16 | Fan |
| 17 | Fixed plate |
| 18 | Armature plate |
| 19 | Spring |
| 20 | Electromagnetic coil |
| 21 | Ball bearings |
| 22 | Motor shaft |
| 23 | Bearing cover |
| 24 | Waterproof seal |
| 25 | V-ring |
| 26 | Waterproof cover attachment bolts |
| 27 | Waterproof cover |

### - Gap Inspection

(1) Remove the brake release bolt [5] and the manual release prevention spacer [4].
(2) Remove the cover [14].
(3) Remove the shaft-retaining C-ring [15] and the fan [16].
(4) Remove the brake release [2] (2 locations) and remove the waterproof seal [24].
(5) Insert a gap gauge between the stationary core [1] and the armature plate [18] and measure the gap. Measure in 3 locations around the circumference.
(6) Adjustment is required if the gap value is near the limit.

| Gap value G (mm) | |
|---|---|
| Required value (original value) | Limit value |
| 0.35 – 0.45 | 1.2 |

### - Gap Adjustment

(1) Remove the brake release bolt [5] and the manual release prevention spacer [4].
(2) Remove the cover [14].
(3) Remove the shaft-retaining C-ring [15] and the fan [16].
(4) Pull off the V-ring [25].
(5) Remove the brake release [2] (2 locations) and remove the waterproof seal [24].
(6) Remove the waterproof cover attachment bolts [26], and remove the waterproof cover [27].
(7) Insert a gap gauge between the stationary core [1] and the armature plate [18] and rotate to the right the gap adjusting nuts [9] that are attached to ends of the stud bolts [6]. If the gap is large, and adjustments are not possible, decrease the number of adjustment washers [7]. There are 3 adjusting nuts [9]. Adjust these in turn so that 3 positions on the circumference are uniformly at the required gap.
(8) Attach the waterproof cover [27] using the waterproof cover attachment bolts [26]. At this time align the cutout area on the side of the waterproof cover [27] with position of the brake release bolt [5]. Attach the waterproof cover [27] so that the gap (A) between its hole and the motor shaft [22] is nearly uniform.
(9) Clean the surface of the waterproof seal [24] to remove impurities.
(10) As shown in the construction diagram, install the waterproof seal [24] between the stationary core [1] and the waterproof cover [27]. Then attach the brake release [2]. Align the hole in the waterproof seal [24] for the brake release bolt with the position of the release bolt [5]. Next, attach along the machined surfaces around the stationary core [1]. Be careful that the waterproof seal [24] does not meander. Otherwise water could leak in.)
(11) Turn the power on and off to check brake action.
(12) Attach the V-ring [24]. Wipe off the lip and surface near the lip of the V-ring [25], lightly coat the the lip contact surface with grease, and attach. Observe the attaching dimension (B=6mm).
(13) Attach the fan [16], shaft-retaining C-ring [15] and cover [14].
(14) Finally, attach the brake release bolt [5] and the manual release prevention spacer [4].

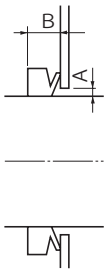

## ■ FB-20 (Outdoor Type)

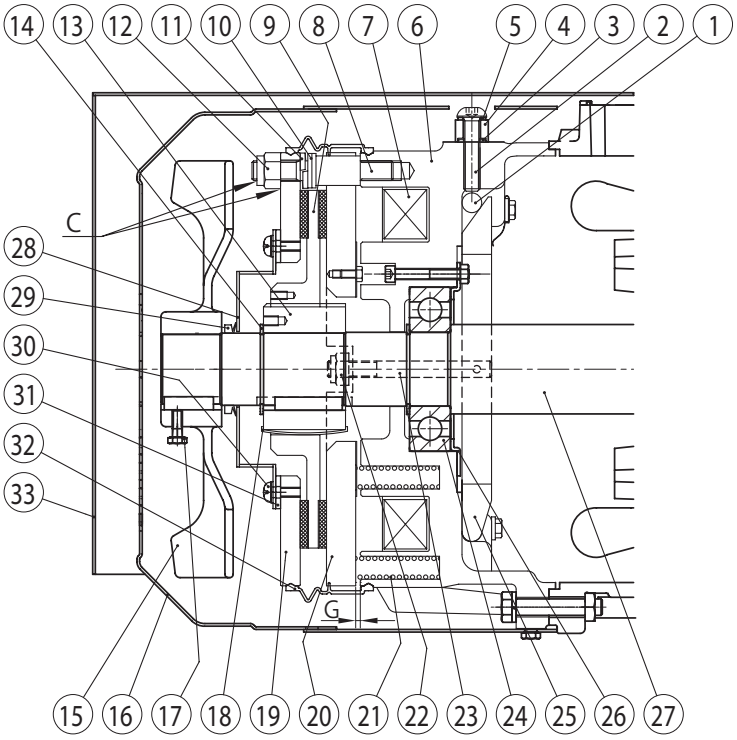


Figure 8-29

| Code | Part Name |
|---|---|
| 1 | Roller |
| 2 | Brake release bolt |
| 3 | Rubber packing |
| 4 | Manual release prevention spacer |
| 5 | Seal washer |
| 6 | Stationary core |
| 7 | Electromagnetic coil |
| 8 | Stud bolt |
| 9 | Brake lining |
| 10 | Adjusting washer |
| 11 | Spring washer |
| 12 | Gap adjusting nut |
| 13 | Boss |
| 14 | Shaft-retaining C-ring |
| 15 | Fan |
| 16 | Cover |
| 17 | Fan set screw |
| 18 | Leaf spring |
| 19 | Fixed plate |
| 20 | Armature plate |
| 21 | Spring |
| 22 | Nut |
| 23 | Tap-end stud |
| 24 | Ball bearings |
| 25 | Release lever |
| 26 | Bearing cover |
| 27 | Motor shaft |
| 28 | Waterproof cover |
| 29 | V-ring |
| 30 | Waterproof cover attachment bolts |
| 31 | Waterproof cover gasket |
| 32 | Waterproof seal |
| 33 | Outdoor cover |

Note : The shape of the outdoor cover [33] differs for vertical type specification.

### - Gap Inspection

(1) Remove the outdoor cover [33] and the cover [16].

(2) Loosen the fan set screw [17] and remove the fan [15].

(3) Remove the waterproof seal [32].

(4) Insert a gap gauge between the stationary core [6] and the armature plate [12], and measure the gap. Measure in 3 locations around the circumference.

(5) Adjustment is required if the gap value is near the limit.

| Gap value G (mm) | |
|---|---|
| Required value (original value) | Limit value |
| 0.6 – 0.7 | 1.5 |

### - Gap Adjustment

(1) Remove the outdoor cover [33] and the cover [16].

(2) Loosen the fan set screw [17] and remove the fan [15].

(3) Pull off the V-ring [29].

(4) Remove the waterproof seal [32].

(5) Insert a gap gauge between the stationary core [6] and the armature plate [20] and rotate to the right the gap adjusting nuts [12] that are attached to ends of the stud bolts [8]. If large adjustments to the gap are not possible, decrease the number of adjusting washers [10]. There are 3 gap adjusting nuts [12]. Adjust these in turn so that 3 positions on the circumference are uniformly at the required gap.

(6) Turn the power on and off to check brake action.

(7) Attach the waterproof cover [28] so that the gap (A) between its hole and the motor shaft [27] is nearly uniform. (Only when the waterproof cover [28] has been removed)

(8) Clean the surface of the waterproof seal [32] to remove impurities.

(9) As shown in the construction diagram, install the waterproof seal [32] between the stationary core [6] and the fixed plate [19]. (Be careful that the waterproof seal [32] does not meander. Otherwise water could leak in.)

(10) Attach the V-ring [29]. Wipe off the lip and surface near the lip of V-ring [29], lightly coat the the lip contact surface with grease, and attach. Observe the attaching dimension (B=7mm).

(11) Thoroughly coat the gap (C) between the gap adjusting nuts [12], the stud bolts [8] and the fixed plate [19] with waterproof adhesive (Three Bond 1102).

(12) Attach the fan [15], cover [16] and outdoor cover [33].

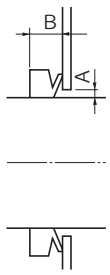

## ■ FB-30 (Outdoor Type)

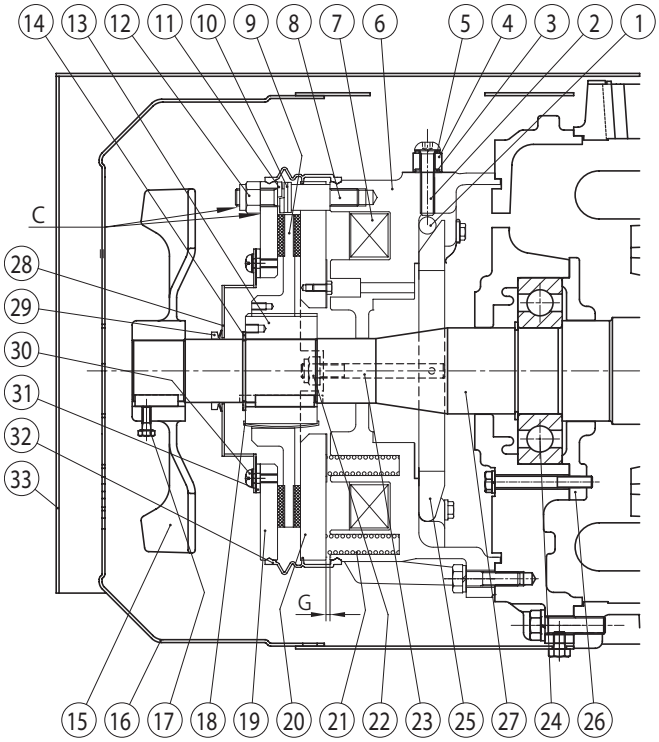


Figure 8-30

| Code | Part Name |
|---|---|
| 1 | Roller |
| 2 | Brake release bolt |
| 3 | Rubber packing |
| 4 | Manual release prevention spacer |
| 5 | Seal washer |
| 6 | Stationary core |
| 7 | Electromagnetic coil |
| 8 | Stud bolt |
| 9 | Brake lining |
| 10 | Adjusting washer |
| 11 | Spring washer |
| 12 | Gap adjusting nut |
| 13 | Boss |
| 14 | Shaft-retaining C-ring |
| 15 | Fan |
| 16 | Cover |
| 17 | Fan set screw |
| 18 | Leaf spring |
| 19 | Fixed plate |
| 20 | Armature plate |
| 21 | Spring |
| 22 | Nut |
| 23 | Tap-end stud |
| 24 | Ball bearings |
| 25 | Release lever |
| 26 | Bearing cover |
| 27 | Motor shaft |
| 28 | Waterproof cover |
| 29 | V-ring |
| 30 | Waterproof cover attachment bolts |
| 31 | Waterproof cover gasket |
| 32 | Waterproof seal |
| 33 | Outdoor cover |

Note : The shape of the outdoor cover [33] differs for vertical type specification.

### - Gap Inspection

(1) Remove the outdoor cover [33] and the cover [16].
(2) Loosen the fan set screw [17] and remove the fan [15].
(3) Remove the waterproof seal [32].
(4) Insert a gap gauge between the stationary core [6] and the armature plate [20], and measure the gap. Measure in 3 locations around the circumference.
(5) Adjustment is required if the gap value is near the limit.

| Gap value G (mm) | |
|---|---|
| Required value (original value) | Limit value |
| 0.6 – 0.7 | 1.5 |

### - Gap Adjustment

(1) Remove the outdoor cover [33] and the cover [16].
(2) Loosen the fan set screw [17] and remove the fan [15].
(3) Pull off the V-ring [29].
(4) Remove the waterproof seal [32].
(5) Insert a gap gauge between the stationary core [6] and the armature plate [20] and rotate to the right the gap adjusting nuts [12] that are attached to ends of the stud bolts [8]. If large adjustments to the gap are not possible, decrease the number of adjusting washers [10]. There are 3 gap adjusting nuts [12]. Adjust these in turn so that 3 positions on the circumference are uniformly at the required gap.
(6) Turn the power on and off to check brake action.
(7) Attach the waterproof cover [28] so that the gap (A) between its hole and the motor shaft [27] is nearly uniform. (Only when the waterproof cover [28] has been removed)
(8) Clean the surface of the waterproof seal [32] to remove impurities.
(9) As shown in the construction diagram, install the waterproof seal [32] between the stationary core [6] and the fixed plate [19]. (Be careful that the waterproof seal [32] does not meander. Otherwise water could leak in.)
(10) Attach the V-ring [29]. Wipe off the lip and surface near the lip of V-ring [29], lightly coat the the lip contact surface with grease, and attach. Observe the attaching dimension (B=7mm).
(11) Thoroughly coat the gap (C) between the gap adjusting nuts [12], the stud bolts [8] and the fixed plate [19] with waterproof adhesive (Three Bond 1102).
(12) Attach the fan [15], cover [16] and outdoor cover [33].

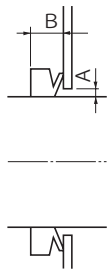

## ■ ESB-250, ESB-250-2 (Outdoor Type)

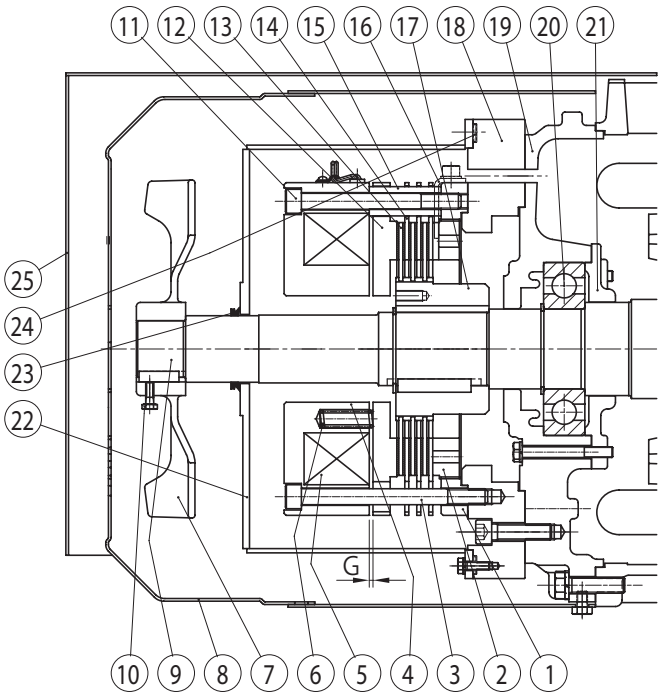


Figure 8-31

| Code | Part Name |
|---|---|
| 1 | Center ring |
| 2 | Gap adjusting screw |
| 3 | Attachment bolt |
| 4 | Field |
| 5 | Brake coil |
| 6 | Actuating spring |
| 7 | Fan |
| 8 | Cover |
| 9 | Motor shaft |
| 10 | Fan set screw |
| 11 | Lock bolt |
| 12 | Armature |
| 13 | Inner disc |
| 14 | Outer disc |
| 15 | Spacer bush |
| 16 | Stopper |
| 17 | Hub |
| 18 | Brake adapter plate |
| 19 | Opposite drive end cover |
| 20 | Opposite drive end bearing |
| 21 | Opposite drive end bearing cover |
| 22 | Brake cover |
| 23 | V-ring |
| 24 | Brake cover gasket |
| 25 | Outdoor cover |

Note : 1. Motor configuration differs for ventilated types.
2. There are 3 of [13][14] for ESB-250 (horizontal types) and 2 for ESB-250-2 (vertical types).
3. The outdoor cover [25] for ESB-250-2 (the vertical types) has a different shape.

| Items | | Specifications |
|---|---|---|
| Rated input voltage | | AC200/220V 50/60Hz |
| Maximum input voltage | | AC240V 50/60Hz |
| Minimum input voltage | | AC170V 50/60Hz |
| Standard output voltage | Instantaneous voltage | DC180V (for AC200V input) |
| | Steady voltage | DC90V (for AC200V input) |
| Maximum output current | | DC1.8A (Steady output) |
| Over excitation time | | 0.4 – 1.2 s |
| Insulation resistance | | 100MΩ or larger (When measured with 1000V megohmmeter) |
| Insulation withstand voltage | | AC2000V for one time or more |
| Maximum frequency | Inching | When on-time 1.2 s or less: 8 cycles/min |
| | Constant | When on-time exceeds 1.2 s: 30 cycles/min |
| Allowable ambient temperature | | -20℃ to 60℃ |

## ■ Accessory Rectifier (DC power supply unit) Model HD-110M3

Outline drawing

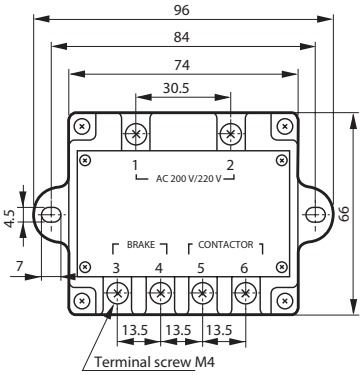


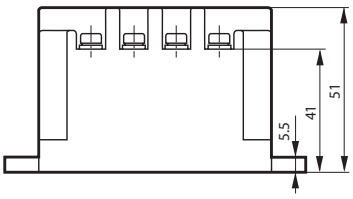


Figure 8-32

Internal circuit (diagram)

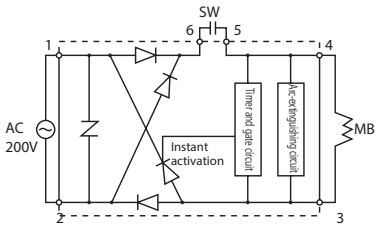


Note : 1. Model HD-110M3 is an indoor model. Take care to avoid water, etc.
2. Transformer is necessary for operation with 400V class power source. Secondary voltage is 200 – 220V.

- **Gap Inspection**

(1) Remove the outdoor cover [25] and the cover [8].

(2) Loosen the fan set screw [10] and remove the fan [7].

(3) Pull off the V-ring [23] and remove the brake cover [22].

(4) Insert a gap gauge between the field [4] and the armature [12]and measure the gap. Measure in 4 locations around the circumference.

(5) Adjustment is required if the gap value is near the limit.

| Gap value G (mm) | |
|---|---|
| Required value (original value) | Limit value |
| 0.7 | 2.0 |

- **Gap Adjustment**

(1) Manually release the brake following the procedure on P71.

(2) Loosen the stopper [16] on the periphery of the center ring [1], and remove. This will free the gap adjusting screws [2]. (See Figure 8-33)

(3) Insert the gap adjusting bar (customer to prepare an angle plate. See Figure 8-35) from between the outer disc [14] and the center ring [1] into a hole for a gap adjusting screw [2].
Rotating to the left as seen from the field [4] side, will narrow the gap. (See Figure 8-34)

(4) Six attachment bolts [3] and lock bolts [11] alternately pass through the space between the outer disc [14] and the center ring [1]. Rotating the gap adjusting bar will contact these bolts. There are 8 equally distributed holes for gap adjusting screws [2]. Adjust the gap G to the required value by repeating (3) each time the gap adjusting bar contacts a bolt,.

(5) Select the point where hole and screw hole are closest to the required gap and attach the stopper [16] there.

(6) After returning the manual brake release to its original state, turn power on and off to check brake action.

(7) Attach the brake cover [22], V-ring [23], fan [7], fan set screw [10], cover [8] and outdoor cover [25]. At this time coat the fan set screw [10] with Three Bond TB2365.

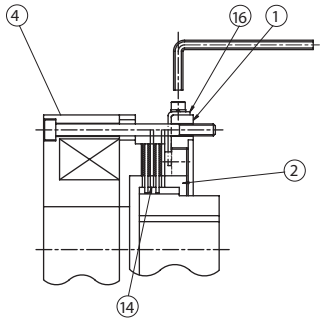


Figure 8-33

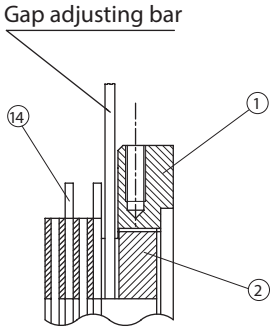


Figure 8-34

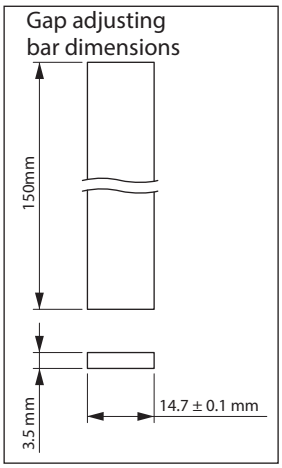


Figure 8-35

## 8-9 Changing the Brake Lining and Inner Disc

If the following conditions occur ask the nearest authorized service station to exchange the brake linings and inner discs with new ones.

**(1) FB Brakes (excluding FB-01A1, FB-02A1, FB-05A1), ESB-250, ESB-250-2**

When the thickness of brake lining (FB brake) or inner disc (ESB-250) reaches the use limit thickness in Table 8-18

**(2) FB-01A1, FB-02A1, FB-05A1**

When after gap adjustment the brake gap still reaches the limit (see P47, P58)

Table 8-18 Brake Lining, Inner Disc Dimensions

| Brake type | Brake lining Inner disc Dimension drawing | Original thickness | | Usable thickness limit | |
|---|---|---|---|---|---|
| | | $t_0$(mm) | $t_1$(mm) | $t_0$(mm) | $t_1$(mm) |
| FB-01A1, FB-02A1, FB-05A1 | 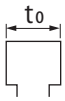  | 7.0 | – | – | – |
| FB-1D | | | | 6.0 | |
| FB-1E | | 8.8 | | 7.8 | |
| FB-1HE, FB-2E | | 9.0 | | 8.0 | |
| FB-3E, FB-4E | | 10.4 | | 8.4 | |
| FB-5E, FB-8E | 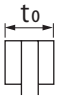  | 10 | | 6.0 | |
| FB-10E, FB-15E | | 11 | | 7.0 | |
| FB-20, FB-30 | | 16 | | 12 | |
| ESB-250 ESB-250-2 | 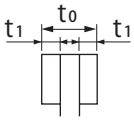  | 6.0 | 1.5 | 3.6 | 0.3 |

- Brake torque may not be at the prescribed level during initial operation. In such case, turn motor and brake power on and off under the lightest possible load, to rub the brake lining and the inner disc friction surfaces.
- When changing the brake lining and the inner disc, change the boss and leaf springs (for FB-5E – FB-15E, FB-20, FB-30, include the gap adjusting nuts) as a set.
- After 2 million or more cycles of operation, (for FB-30, ESB-250 1 million cycles or more), or after 10 years or more have passed since shipment from the factory, inspect to check whether continued operation is possible, even if the lining or the inner disc is not at the usable thickness limit.
- Check the following items concerning the condition of each mechanical part.
  - Are the material of linings split or chipped?
  - Is there any peeling or gap between the material of lining and the disc?
  - Does the spline unit of the brake lining and the inner disc exhibit any cracking, chipping, or stepped wear?
  - Is there any stepped wear on the surfaces around the stud bolts or armature plate?
- Change the brake lining and the inner disc, even if it has not reached the usable thickness limit, if 10 or more years have elapsed since the manufacturing date and the brake is used outdoors or in a high-humidity environment, or if it is stored or rested for a long period of time.

## 8-10 Changing the V-Ring and Waterproof Seal (Outdoor Type)

V-rings and waterproof seals degrade over the years, losing their waterproofing abilities. As a guideline contact the nearest authorized service station every 3 years. If the sliding surfaces of oil seals or V-rings show signs of wear or corrosion, replace them with new ones. Sliding surfaces are made of carbon steel, so rain water, condensation and other factors could cause rust to form and spread. Because this could lead to oil seal damage, take on-going rust prevention measures.

## 8-11 Manually Releasing the Brake

To manually release the brake with the power off, operate the brake release mechanism as shown below.

### ■ FB Brakes (excluding FB-20, FB-30) (FB-01A1 – FB-05A1 are options)

(1)First remove the brake release bolts from the 2 opposing angles and remove the release prevention spacers. Reinsert the bolts and rotate with a hexagonal wrench to release the brake. Be careful not to over rotate the brake release bolts. (Rotate the brake release bolts while checking to see if the brake is released. (See Figures 8-36, 8-37)

(2)After releasing the brake, to return it to its original condition, for safety, return the manual release prevention spacers that were removed in (1) to their original positions. (See Figure 8-37)

(3)This table show brake release bolt sizes.

| Brake type | Bolt size |
|---|---|
| FB-01A1, FB-02A1, FB-05A1 FB-1D | M5 |
| FB-1E, FB-1HE, FB-2E | M6 |
| FB-3E, FB-4E | M8 |
| FB-5E, FB-8E, FB-10E, FB-15E | M10 |

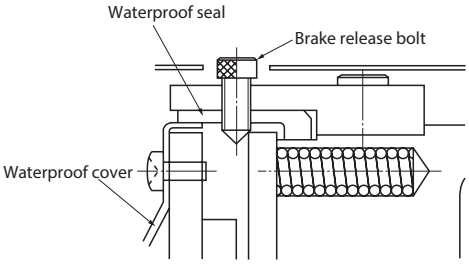


When released

Figure 8-36

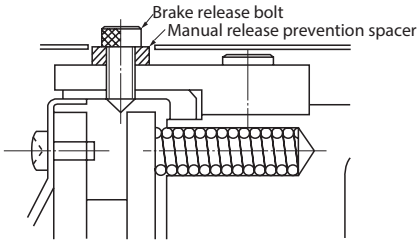


When operating

Figure 8-37

Note : Indoor types do not come with waterproof seals or waterproof covers.

### ■ FB-20, FB-30

(1) In the case of outdoor types, remove the lid on the window part of the the outdoor cover [33]. Remove the grommet [28] (indoor type), remove the brake release bolt [2] using a hexagonal wrench (for an M8 hole bolt), and remove the rubber gasket [3] and the manual release prevention spacer [4]. The brake will release when you again rotate the bolt using the hexagonal wrench. Be careful not to over rotate the brake release bolt. (Rotate the brake release bolt [2] while checking to see if the brake is released.) (See Figure 8-38)

(2) After releasing the brake, to return it to its original condition, for safety, return the manual release prevention spacer and the rubber gasket [3] that were removed in (1) to their original positions, and firmly tighten the brake release bolt [2]. (See Figure 8-39)
Next re-attach the grommet [28] (indoor type) in its original state. In the case of outdoor types, attach the lid on the window part of the the outdoor cover [33] as it was before.

- Note that if the rubber gasket [3] and the seal washer [5] for the brake release bolt [2] unit are not attached when returning to the original state, dust-proofing and waterproofing capabilities will be lost.
  Also, firmly tighten the brake release bolt [2]. Otherwise waterproofing capability may be lost.
  Also make certain to return the grommet [28] (indoor type) or outdoor cover [33] window lid (outdoor type) to their original states.
- If the machine is operated when the brake release bolt has not been returned to its original position, in the worst case it is possible that the manual release would function before maximum gap is obtained, and the brake would cease to function. Therefore, make certain to always operate with the manual release prevention spacer attached.

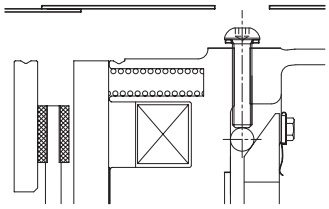

When released

Figure 8-38

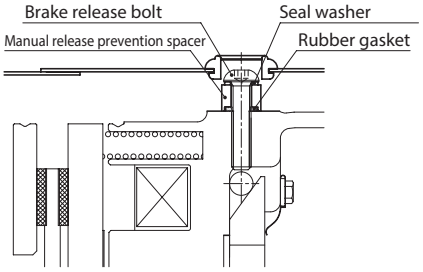


When operating

Figure 8-39

## ■ ESB-250, ESB-250-2

(1) In the case of outdoor types, remove outdoor cover [25]. Remove the cover [8], fan [7], and brake cover [22] (outdoor type).

(2) Insert M12×65 hexagon socket head bolts (customer to prepare) through the manual releasing holes, to the field. (Note that if the hexagon socket head bolts are too long they will hit the outer disc and deform it.)

(3) There are two manual release holes at opposing angles. Using a hexagonal wrench equally tighten the bolts in turn.

(4) To release the brake, tighten the bolts until the armature and field stick together.

(5) After returning the brake to its original state, attach the brake cover [22] (outdoor type), fan [7], and cover [8].
At this time coat the fan set screw [10] with Three Bond TB2365.
In the case of outdoor types, attach the outdoor cover as it was before.

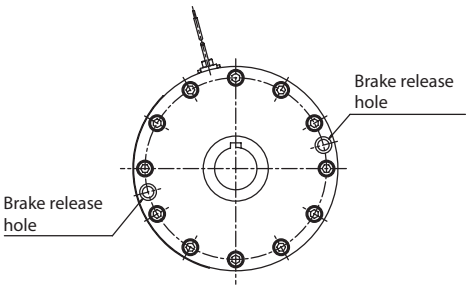


Figure 8-40

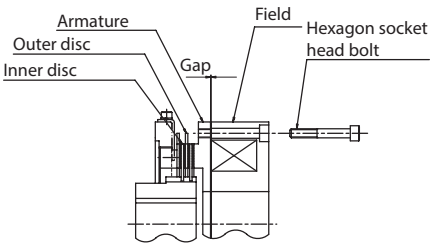


Figure 8-41

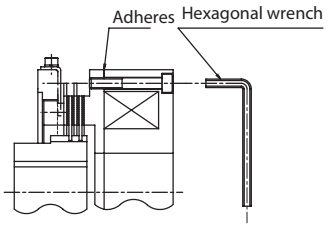


Figure 8-42

## ■ One-Touch Release Lever Method (Optional on all FB brakes except FB-20, FB-30)

(1) To release the brake, pull the release lever out of the holder, and push it toward the load or anti-load side.
(Some specifications do not allow pushing the release lever toward the load side.)
Be careful not to push the lever too far. Pushing the lever too far could damage the brake.
(Push the release lever while checking to see if the brake is released.)

(2) When operating the motor make certain to return the lever to its original position and set it inside the holder. Start operation after confirming that the brake operates properly.

Note : The brake is released while the lever is tilted by a hand, and it works when the lever is released the hold.

When operating

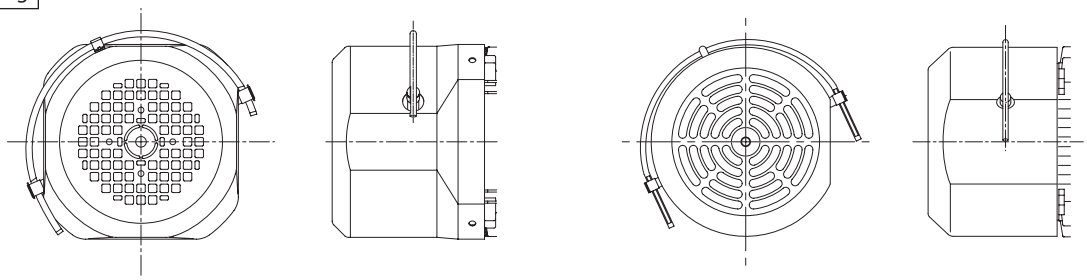

When brake is manually released

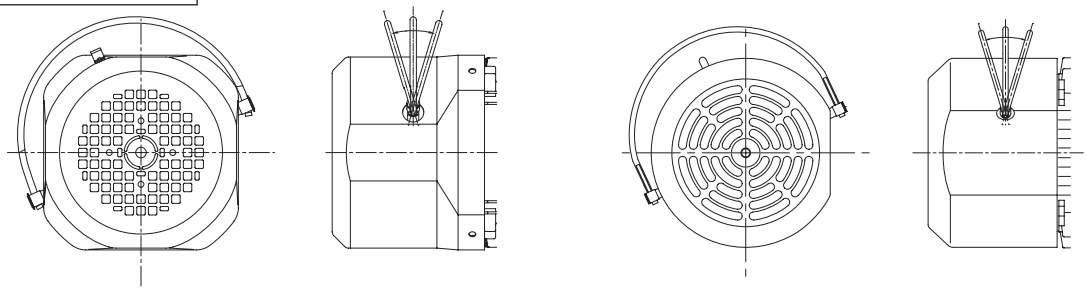

Premium efficiency motor

Other than premium efficiency motor

Figure 8-43

# 9. Troubleshooting

If any abnormal condition occurs, refer to Table 9-1, 9-2 and promptly take appropriate measures.

If these actions do not remedy the issue, immediately contact the nearest authorized service station.

Table 9-1 Troubleshooting

| Problem | | | Cause | Correction |
|---|---|---|---|---|
| The motor will not operate under no load | | | Power failure | Contact the electric power company. |
| | | | Defective electric circuit | Check the circuit. |
| | | | Blown fuse | Replace the fuse. |
| | | | Protective device is engaged | Fix the problem and recover. |
| | | | Load locking | Check the load and safety device. |
| | | | Poor switch contact | Adjust the contact unit. |
| | | | Motor stator coil disconnect | Confer with authorized service station. |
| | | | Bearing damage | Confer with authorized service station. |
| | | | 3-phase is functioning as single-phase | Check the power supply with a voltmeter. Check the motor, transformer coil, contactor, fuse, etc. and repair or replace them. |
| | | | Friction surface of brake is corroded | Request brake cleaning from authorized service station. |
| | | | Incorrect brake gap adjustment | Re-adjust brake gap. (See P47 – 68) |
| The motor rotates without a load but the slow speed shaft does not rotate | | | Damage to gear unit due to overloading of gears, etc. | Confer with authorized service station. |
| The slow speed shaft turns without a load | When a load is applied | The switch overheats | Insufficient switch capacity | Replace with specified switch. |
| | | | Overload | Decrease the load to the specified value. |
| | | Fuse tripping | Insufficient fuse capacity | Replace with specified fuse. |
| | | | Overload | Decrease the load to the specified value. |
| | | The speed will not increase and the motor is overheating | Voltage drop | Contact the electric power company. |
| | | | Overload | Decrease the load to the specified value. |
| | | | Short-circuited motor stator coil | Confer with authorized service station. |
| | | It stops | The key is not inserted | Insert key. |
| | | | Bearing burnout | Confer with authorized service station. |
| | | | Poor adjustment of protection device | Adjust the protection device. |
| | The motor runs in the reverse direction | | Wiring error | Change the connection. |
| | Fuse tripping | | The lead wire is short circuited. | Confer with authorized service station. |
| | | | Poor contact between motor and starter | Make good connection. |
| Excessive temperature rise | | | Overload | Decrease the load to the specified value. |
| | | | Voltage drop or rise | Contact the electric power company. |
| | | | The ambient temperature is high | Improve the ventilation method. |
| | | | Damaged bearing | Confer with authorized service station. |
| | | | Abnormal wear of reducer parts due to overload, etc. | Confer with authorized service station. |
| Oil leakage | Blot or drip of a small amount of oil or grease at seal section of high speed or slow speed shaft | | Grease applied to the oil seal seeps out at first | Wipe off around the oil seal, and observe. |
| | Leakage of oil or grease from high speed or slow speed shaft section | | Damaged oil seal or maybe damaged shaft (or collar) | Confer with authorized service station. |
| | Leakage of oil/grease from the contact surfaces of ring gear housing and casing, etc. | | Loose fastener bolts | Tighten fastener bolts correctly. |
| | Leakage of oil/grease into motor | | Damage to oil seals, or slinger collar | Confer with authorized service station. |
| | | | Excessive oil supply | Remove oil. |

Table 9-2 Troubleshooting

| Problem | | Cause | Correction |
|---|---|---|---|
| Abnormal sound<br>Excessive vibration | | Dust and foreign matter in bearings, or damaged bearings | Confer with authorized service station. |
| | | Reducer parts grinding on foreign matter | Confer with authorized service station. |
| | | Reducer parts are damaged | Confer with authorized service station. |
| | | Warping of housing because the installation surface is not flat | Make the installation base flat or make adjustment using liners, etc. |
| | | Resonance due to insufficient rigidity of installation base | Reinforce the installation base to increase rigidity. |
| | | Nonalignment of shaft with driven machine | Align the shaft centers. |
| | | Transmission of vibration from the driven machine | Individually operate the products to check the source of the sound. |
| With torque limiter, makes chattering sound | | In rare cases this will occur in a low load range. The influence of load fluctuation and vibration from the device causes it. | Performance and lifetime are not affected.<br>It is OK to continue operation. |
| Abnormal motor sounds | | Foreign objects have entered | Confer with authorized service station. |
| | | Bearing damage | Confer with authorized service station. |
| | | Improper brake gap adjustment | Adjust the brake gap.<br>(See P47 – 68) |
| | | Brake lining or inner disc wear | Request brake lining or inner disc replacement from an authorized service station. |
| | | Brake unit electromagnetic coil burnout | Confer with authorized service station. |
| | | Rectifier damage | Confer with authorized service station. |
| | | Leaf spring in the brake boss unit has come off or is damaged | Confer with authorized service station. |
| Brake is ineffective | Does not activate | Forgot to restore the brake release bolt to its original position | Restore the release bolt. |
| | | Improper adjustment after disassembly | Request authorized service station to re-adjust. |
| | Slips<br>(Braking takes a long time) | Not using the quick braking circuit | Change to quick braking circuit.<br>(See P20 – 29) |
| | | Foreign objects in brake lining or inner disc unit, oil adhesion | Request cleaning from authorized service station. |
| | | Brake lining or inner disc wear | Adjust the brake gap.<br>Request brake lining or inner disc replacement from an authorized service station. |
| | | Brake gap not uniform | Adjust the brake gap. |
| | | Overload | Decrease the load to the specified value. |
| | | Brake release bolt not sufficiently restored | Restore the release bolt. |
| Tripping Inverter | Overcurrent shut-off | Sudden speed changes | Increase the time for speed changes. |
| | | Extreme load fluctuation | Decrease load fluctuation. |
| | Overcurrent due to ground fault | Ground fault on out side | Take measures to prevent ground fault. |
| | Direct current overcurrent | Short on output side | Take measures to prevent short.<br>Inspect wiring. |
| | Regenerative overvoltage shut-off | Sudden speed reduction | Increase the time for speed reduction.<br>Decrease brake frequency. |
| | Thermal operation | Overload | Decrease the load to the specified value. |

# 10. Construction Drawings

## 10-1 Gear Unit Construction Drawings (Single Reduction, Double Reduction)

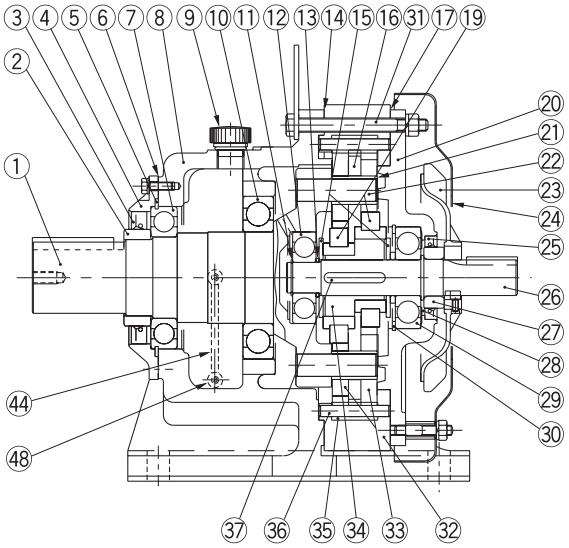


Figure 10-1 Type CHH (Horizontal, Reducer),
Single Reduction (Example: Frame size 6175)

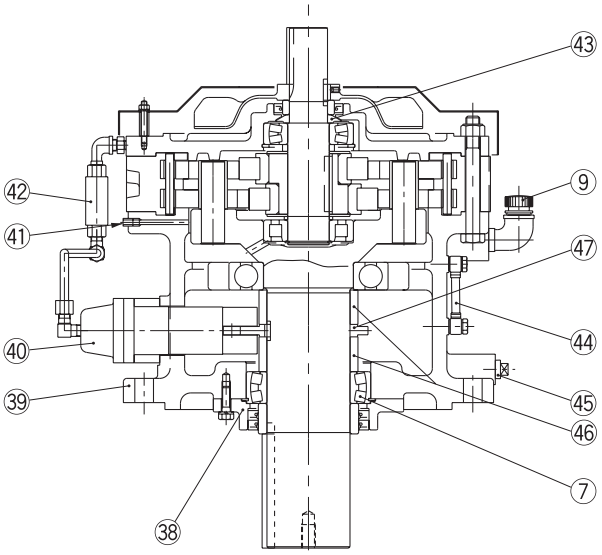


Figure 10-2 Type CVV (Vertical, Reducer),
Single Reduction (Example: Frame size 6225)

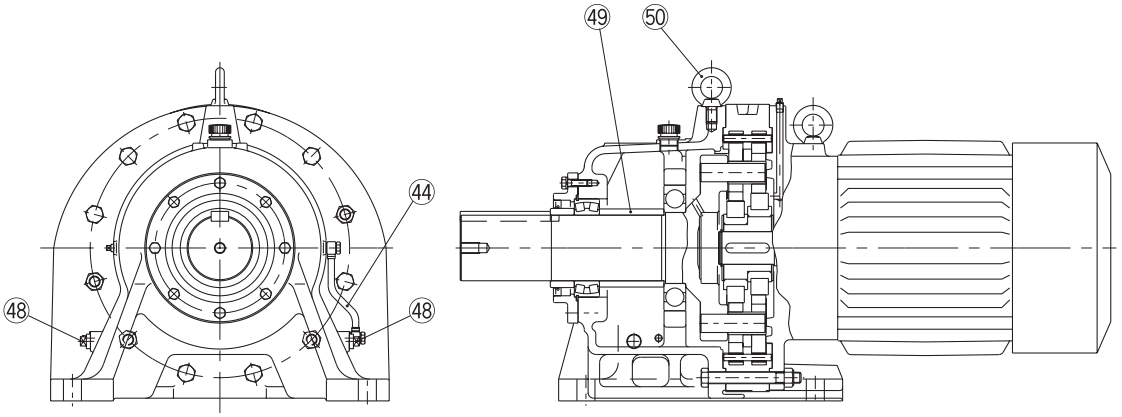


Figure 10-3 Type CHHM (Horizontal, Gearmotor),
Single Reduction (Example: Frame size 6225)

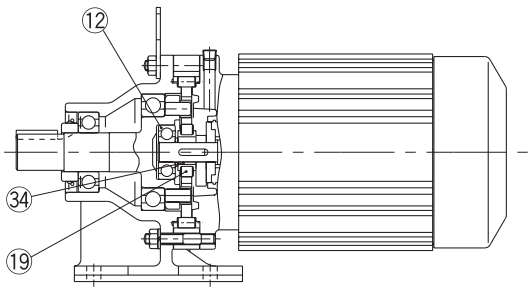


Figure 10-4 Type CNHM (Horizontal, Gearmotor),
Single Reduction (Example: Frame size 6095)

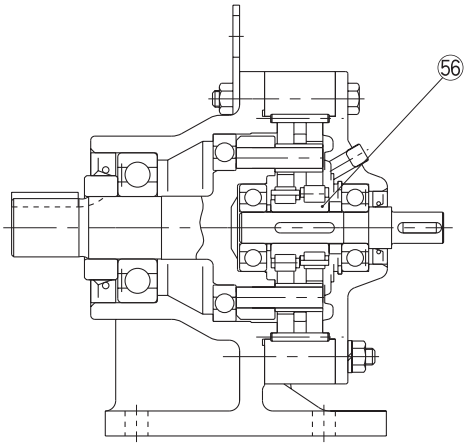


Figure 10-5 Type CNH (Horizontal, Reducer),
Single Reduction (Example: Frame size 6105)

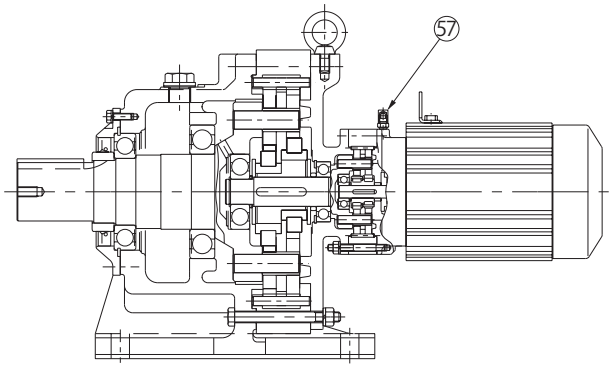


Figure 10-6 Type CHHM (Horizontal, Gearmotor), Double Reduction
(Example: Frame size 6185DA)

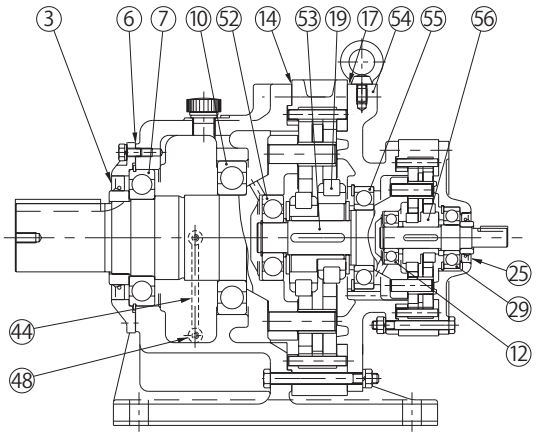


Figure 10-7 Type CHH (Horizontal, Reducer), Double Reduction
(Example: Frame size 6185DB)

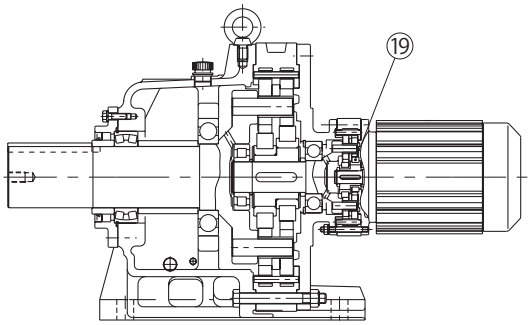


Figure 10-8 Type CHHM (Horizontal, Gearmotor), Double Reduction
(Example: Frame size 6225DB)

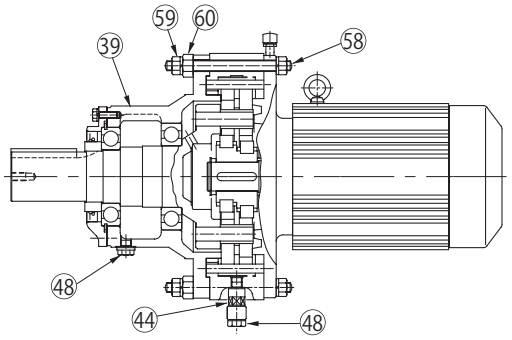


Figure 10-9 Type CHFM (Horizontal, Gearmotor), Single Reduction
(Example: Frame size 6165)

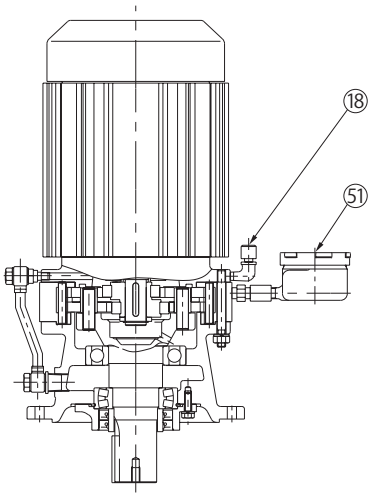


Figure 10-10 Type CVVM (Vertical, Gearmotor),
Single Reduction (Example: Frame size 6145)

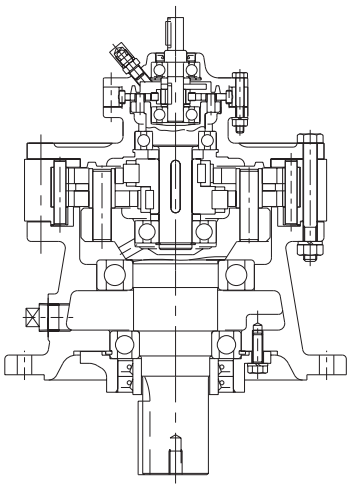

Figure 10-11 Type CVV (Vertical, Reducer),
Double Reduction
(Example: Frame size 6135DA)

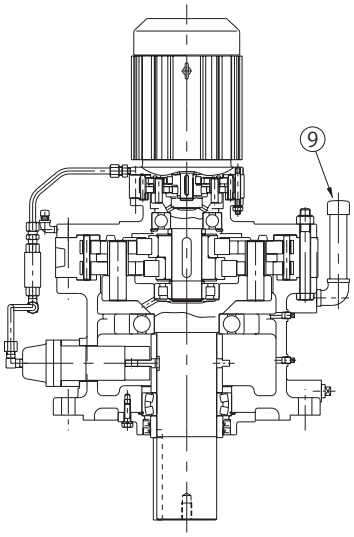


Figure 10-12 Type CVVM (Vertical, Gearmotor),
Double Reduction
(Example: Frame size 6225DA)

Table10-1 Gear Unit, Principal Parts Single Reduction, Double Reduction

| Code | Part Name | Code | Part Name | Code | Part Name | Code | Part Name | Code | Part Name |
|---|---|---|---|---|---|---|---|---|---|
| 1 | Slow speed shaft (Output shaft) | 13 | Spacer ring | 25 | Oil seal | 37 | Parallel key | 49 | Spacer ring |
| 2 | Collar | 14 | Gasket B | 26 | High speed shaft | 38 | Gland | 50 | Eye-bolt |
| 3 | Oil seal | 15 | End plate | 27 | Collar | 39 | Flanged casing | 51 | Oil fill cup |
| 4 | Slow speed end cap | 16 | Spacer ring | 28 | Spacer ring | 40 | Plunger pump | 52 | Intermediate shaft bearing A |
| 5 | Retaining ring | 17 | Gasket C | 29 | High speed shaft bearing B | 41 | Air vent plug | 53 | Intermediate shaft |
| 6 | Gasket A | 18 | Air vent plug | 30 | Retaining ring for opening | 42 | Oil signal | 54 | Intermediate cover |
| 7 | Slow speed shaft bearing A | 19 | Bearing for eccentric | 31 | Upper bolt | 43 | Oil slinger | 55 | Intermediate shaft bearing B |
| 8 | Horizontal casing | 20 | Internal cover | 32 | Ring gear housing | 44 | Oil gauge | 56 | Eccentric cam (double) |
| 9 | Oil filter plug | 21 | Slow speed shaft roller | 33 | Cycloid disc | 45 | Plug (Oil drain port) | 57 | Grease fitting (with cap) |
| 10 | Slow speed shaft bearing B | 22 | Slow speed shaft pin | 34 | Eccentric | 46 | Spacer ring | 58 | Bolts for ring gear housing (Flange type) |
| 11 | Retaining ring for shaft | 23 | Cooling fan | 35 | Ring gear roller | 47 | Cam | 59 | Disassembly prevention nut (Flange type) |
| 12 | High speed shaft bearing A | 24 | Fan cover | 36 | Ring gear pin | 48 | Plug (Oil drain port) | 60 | Spacer replacement nut (Flange type) |

## 10-2 Gear Unit Construction Drawings (Triple Reduction)

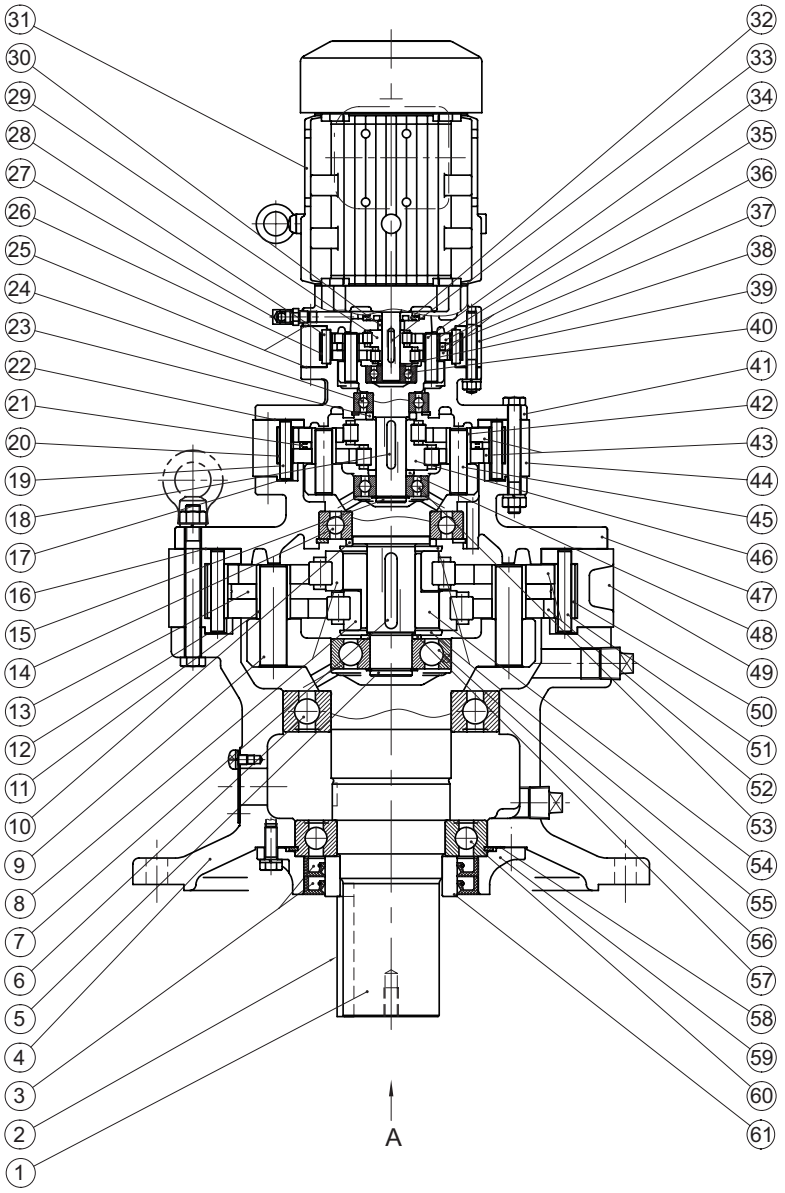


Figure 10-13 Type CVVM (Vertical, Gearmotor), Triple Reduction
(Example: Frame size 6185TD)

Table10-2 Gear Unit, Principal Parts
(Triple Reduction)

| Code | Part Name |
|---|---|
| 1 | Slow speed shaft (Output shaft) |
| 2 | Key |
| 3 | Oil seal |
| 4 | Flanged casing |
| 5 | Intermediate shaft |
| 6 | Ball bearing |
| 7 | Key |
| 8 | Roller bearing |
| 9 | Slow speed shaft pin |
| 10 | Spacer ring |
| 11 | Slow speed shaft roller |
| 12 | Gasket B |
| 13 | Spacer ring |
| 14 | Ball bearing |
| 15 | Intermediate shaft |
| 16 | Gasket C |
| 17 | Gasket B |
| 18 | Key |
| 19 | Ring gear pin |
| 20 | Ring gear roller |
| 21 | Spacer ring |
| 22 | Gasket C |
| 23 | Spacer ring |
| 24 | Ball bearing |
| 25 | Gasket B.C |
| 26 | Ring gear roller |
| 27 | Grease fitting (with cap) |
| 28 | Ring gear pin |
| 29 | Eccentric cam |
| 30 | Spacer ring |
| 31 | Motor |
| 32 | Slinger |
| 33 | Key |
| 34 | Slow speed shaft pin |
| 35 | Slow speed shaft roller |
| 36 | Cycloid disc |
| 37 | Spacer ring |
| 38 | Ring gear housing |
| 39 | Spacer ring |
| 40 | Ball bearing |
| 41 | Intermediate cover |
| 42 | Slow speed shaft roller |
| 43 | Cycloid disc |
| 44 | Ring gear housing |
| 45 | Slow speed shaft pin |
| 46 | Eccentric cam |
| 47 | Intermediate cover |
| 48 | Spacer ring |
| 49 | Ring gear housing |
| 50 | Ring gear roller |
| 51 | Ring gear pin |
| 52 | Cycloid disc |
| 53 | Ball bearing |
| 54 | Eccentric |
| 55 | End plate |
| 56 | Ball bearing |
| 57 | Spacer ring |
| 58 | Gasket A |
| 59 | Gland |
| 60 | Ball bearing |
| 61 | Collar |

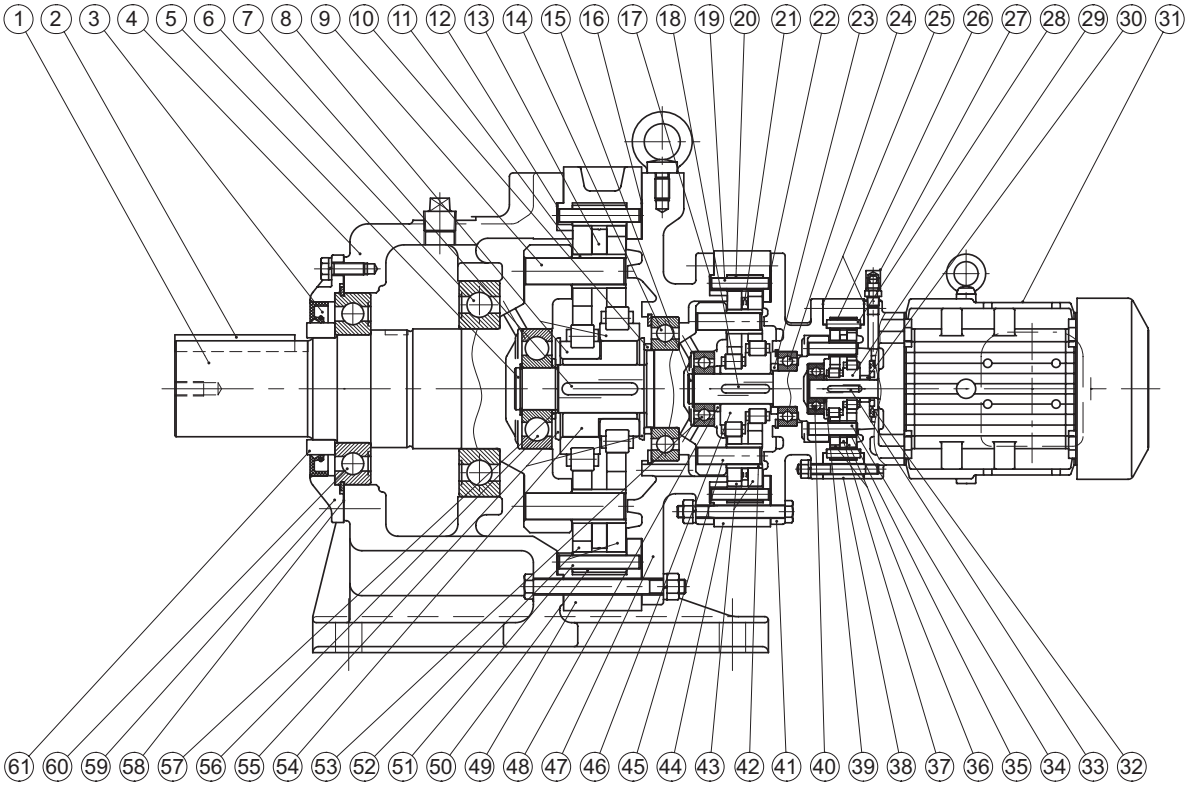


Figure 10-14 Type CHHM (Horizontal, Gearmotor), Triple Reduction
(Example: Frame size 6185TD)

Table10-3 Gear Unit, Principal Parts (Triple Reduction)

| Code | Part Name | Code | Part Name | Code | Part Name |
|---|---|---|---|---|---|
| 1 | Slow speed shaft (Output shaft) | 21 | Spacer ring | 41 | Intermediate cover |
| 2 | Key | 22 | Gasket C | 42 | Slow speed shaft roller |
| 3 | Oil seal | 23 | Spacer ring | 43 | Cycloid disc |
| 4 | Horizontal casing | 24 | Ball bearing | 44 | Ring gear housing |
| 5 | Intermediate shaft | 25 | Gasket B.C | 45 | Slow speed shaft pin |
| 6 | Ball bearing | 26 | Ring gear roller | 46 | Eccentric cam |
| 7 | Key | 27 | Grease fitting (with cap) | 47 | Intermediate cover |
| 8 | Roller bearing | 28 | Ring gear pin | 48 | Spacer ring |
| 9 | Slow speed shaft pin | 29 | Eccentric cam | 49 | Ring gear housing |
| 10 | Spacer ring | 30 | Spacer ring | 50 | Ring gear roller |
| 11 | Slow speed shaft roller | 31 | Motor | 51 | Ring gear pin |
| 12 | Gasket B | 32 | Slinger | 52 | Cycloid disc |
| 13 | Spacer ring | 33 | Key | 53 | Ball bearing |
| 14 | Ball bearing | 34 | Slow speed shaft pin | 54 | Eccentric |
| 15 | Intermediate shaft | 35 | Slow speed shaft roller | 55 | End plate |
| 16 | Gasket C | 36 | Cycloid disc | 56 | Ball bearing |
| 17 | Gasket B | 37 | Spacer ring | 57 | Spacer ring |
| 18 | Key | 38 | Ring gear housing | 58 | Gasket A |
| 19 | Ring gear pin | 39 | Spacer ring | 59 | Cover |
| 20 | Ring gear roller | 40 | Ball bearing | 60 | Ball bearing |
| | | | | 61 | Collar |

## 10-3 Gear Unit Construction Drawings (SK Series)

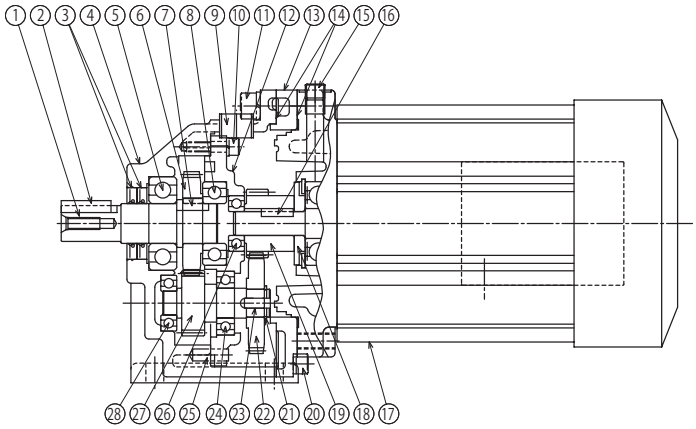


Figure 10-15 Type CHHM (6000SK Series Horizontal, Gearmotor)
(Example: Frame size 6075SK)

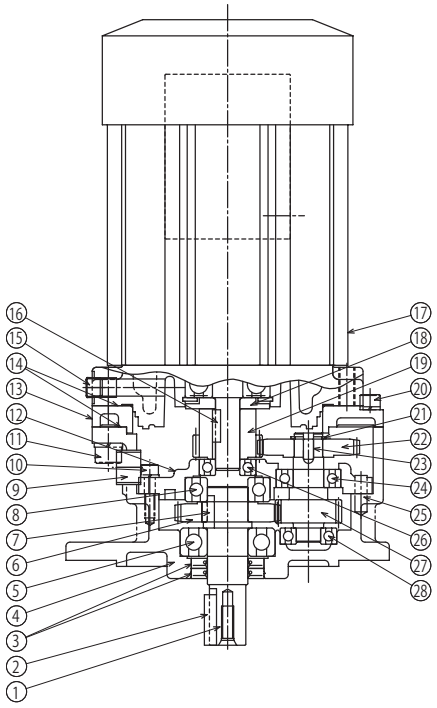


Figure 10-16 Type CVVM (6000SK Series Vertical, Gearmotor)
(Example: Frame size 6075SK)

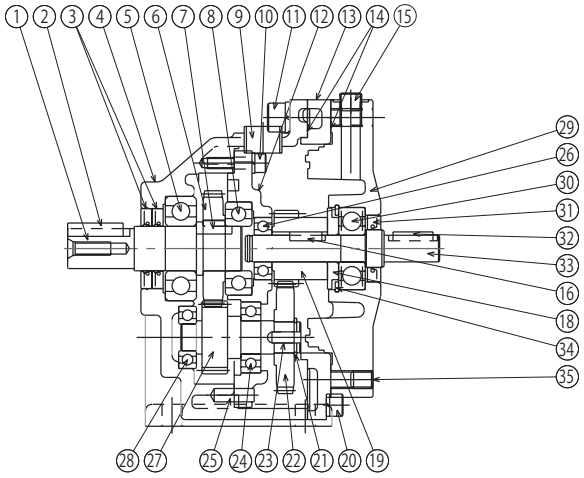


Figure 10-17 Type CHH (6000SK Series Horizontal, Reducer)
(Example: Frame size 6075SK)

Table 10-4 Gear Unit, Principal Parts (SK Series)

| Code | Part Name | Code | Part Name | Code | Part Name |
|---|---|---|---|---|---|
| 1 | Slow speed shaft (Output shaft) | 13 | Adaptor plate | 25 | Pin |
| 2 | Key | 14 | Liquid gasket | 26 | High speed shaft bearing A |
| 3 | Oil seal | 15 | Plug | 27 | Second stage pinion (Mid speed shaft) |
| 4 | Horizontal casing | 16 | Key | 28 | Mid speed shaft bearing A |
| 5 | Slow speed shaft bearing A | 17 | Motor | 29 | Internal cover |
| 6 | Second stage gear | 18 | Slinger | 30 | High speed shaft bearing B |
| 7 | Key | 19 | First stage pinion | 31 | Oil seal |
| 8 | Slow speed shaft bearing B | 20 | Hexagon socket head bolt | 32 | Key |
| 9 | Plug | 21 | Snap ring | 33 | High speed shaft |
| 10 | Hexagon socket head bolt | 22 | First stage gear | 34 | Snap ring |
| 11 | Hexagon socket head bolt | 23 | Key | 35 | Hexagon socket head bolt |
| 12 | Bearing plate | 24 | Mid speed shaft bearing B | | |

## 10-4 Gear Unit Construction Drawings (Low Reduction Ratio Series)

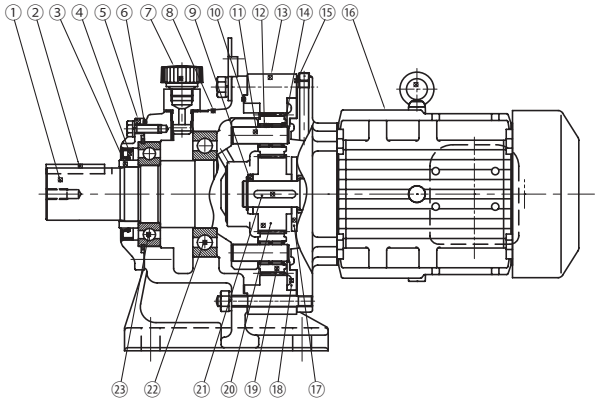


Figure 10-18 Type PHHM (Horizontal, Gearmotor)
(Example: Frame size 6135)

Table 10-5 Gear Unit, Principal Parts (Low Reduction Ratio Series)

| Code | Part Name | Code | Part Name |
|---|---|---|---|
| 1 | Slow speed shaft (Output shaft) | 13 | Internal gear |
| 2 | Key | 14 | Retaining ring for opening |
| 3 | Collar | 15 | Gasket C |
| 4 | Oil seal | 16 | Motor |
| 5 | Cover | 17 | Slinger |
| 6 | Gasket A | 18 | Support plate |
| 7 | Filler plug | 19 | Planetary gear |
| 8 | Horizontal casing | 20 | Sun gear |
| 9 | Spacer ring | 21 | Key |
| 10 | Gasket B | 22 | Ball bearing |
| 11 | Slow speed shaft pin | 23 | Ball bearing |
| 12 | Roller bearing | | |

## 10-5 Motor Unit Construction Drawing

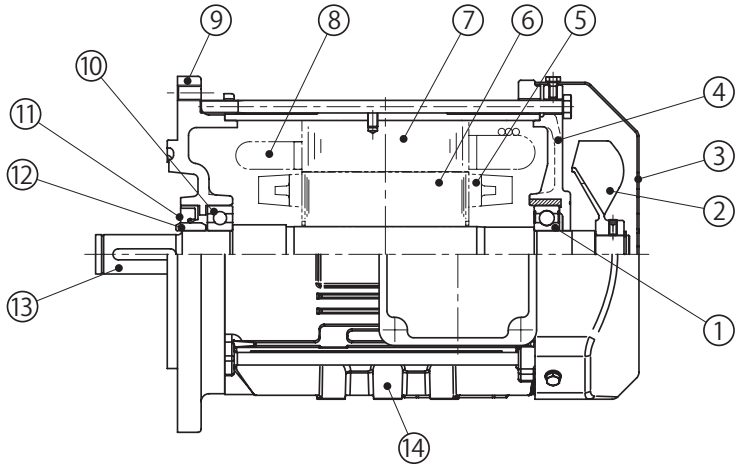


Figure 10-19 Direct-coupled motor for CYCLO Drive (Sealed bearing, oil seal structure)
(Example: N-100L 2.2kW 4P)

Table10-6 Principal Parts of Motor

| Code | Parts Name |
|---|---|
| 1 | Anti-load side motor shaft bearing |
| 2 | Fan |
| 3 | Fan cover |
| 4 | Anti-load side cover |
| 5 | Rotor conductor |
| 6 | Rotor core |
| 7 | Stator core |
| 8 | Stator windings |
| 9 | Motor flange bracket |
| 10 | Load side motor shaft bearing |
| 11 | Oil seal |
| 12 | Oil seal collar |
| 13 | Motor shaft |
| 14 | Frame |

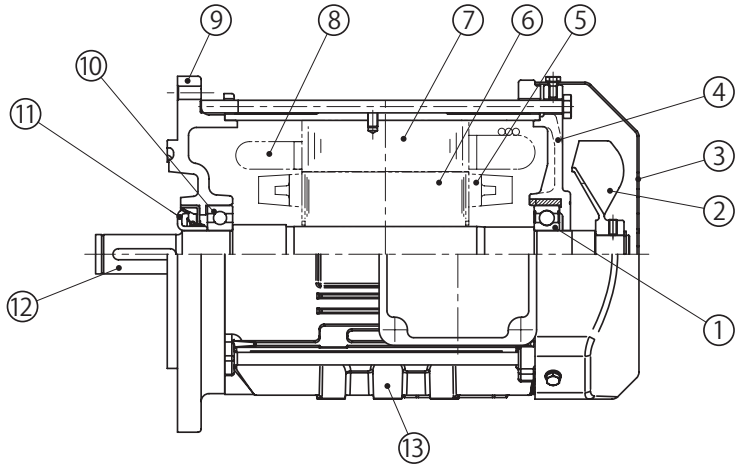


Figure 10-20 Direct-coupled motor for CYCLO Drive (Sealed bearing, Slinger collar structure)
(Example: N-100L 2.2kW 4P)

Table10-7 Principal Parts of Motor

| Code | Parts Name |
|---|---|
| 1 | Anti-load side motor shaft bearing |
| 2 | Fan |
| 3 | Fan cover |
| 4 | Anti-load side cover |
| 5 | Rotor conductor |
| 6 | Rotor core |
| 7 | Stator core |
| 8 | Stator windings |
| 9 | Motor flange bracket |
| 10 | Load side motor shaft bearing |
| 11 | Slinger collar |
| 12 | Motor shaft |
| 13 | Frame |

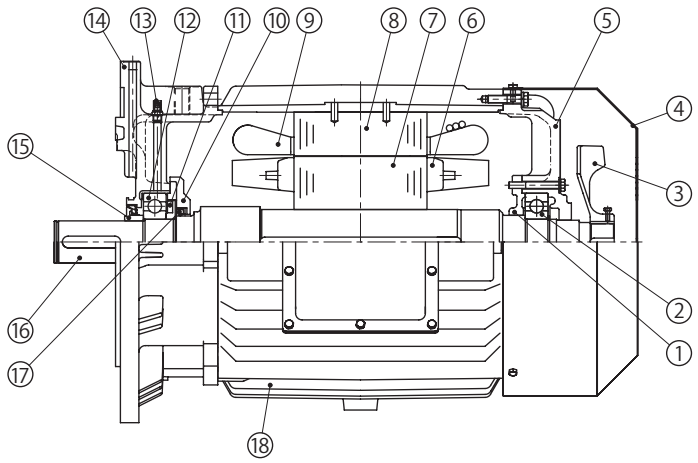


Figure 10-21 Direct-coupled motor for CYCLO Drive (Open bearing structure)
(Example: N-200LS 30kW 6P)

Table10-8 Principal Parts of Motor

| Code | Parts Name |
|---|---|
| 1 | Bearing cover |
| 2 | Anti-load side motor shaft bearing |
| 3 | Fan |
| 4 | Fan cover |
| 5 | Anti-load side cover |
| 6 | Rotor conductor |
| 7 | Rotor core |
| 8 | Stator core |
| 9 | Stator windings |
| 10 | Bearing cover |
| 11 | Oil drain collar |
| 12 | Load side motor shaft bearing |
| 13 | Grease fitting |
| 14 | Motor flange bracket |
| 15 | Slinger collar |
| 16 | Motor shaft |
| 17 | Oil seal |
| 18 | Frame |

# Application Product

# CYCLO® Drive with Torque Limiter

This manual covers the torque limiter unit.
For information on handling the reducer unit and the motor unit see P1 − 79.

## Contents



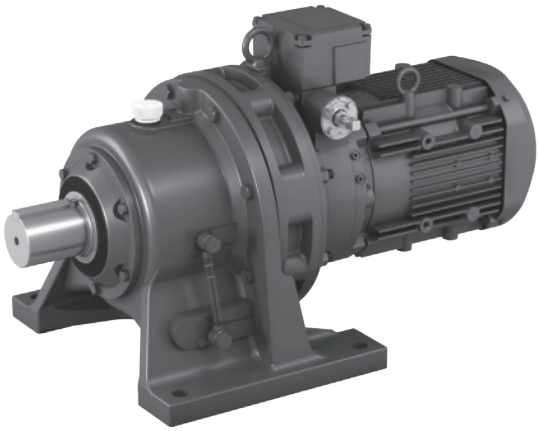

## ⚠ DANGER

- Do not handle the unit when cables are live. Be sure to turn off the power when performing operations on the unit; otherwise, electric shock may result.
- Connect a power cable to the unit in accordance with the maintenance manual; otherwise, electric shock or fire may result.
- Do not forcibly bend, pull, or clamp the power cable and lead wires; otherwise, electric shock or fire may result.

## ⚠ CAUTION

- When wiring, follow the facility's electrical codes and extension regulations to prevent burns, electric shocks, injuries, and fire.

## 11-1 Wiring for a Spring-Loaded Limit Switch

### (1) Limit Switch Type (1-Point Signal, 2-Point Signal, 3-Point Signal)

- When the preset torque is reached, the dog activates the limit switch, which outputs a signal.
- Depending on manufacturing specifications 1 – 3 point signal output is available.
  (Types that have 1 – 3 limit switches.)

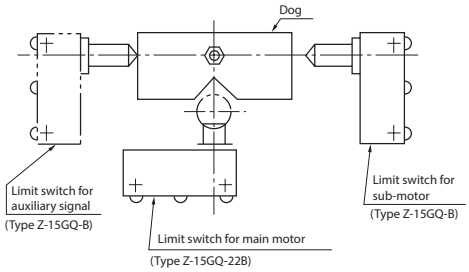


Figure 11-1 Limit Switch

### (2) Limit Switch Wiring

[1] Remove the terminal cover on the terminal box, feed the cabtyre cable through the cable gland for marine use and connect it to the limit switch terminals.

[2] Of the three lead wires, connect as follows:
- For contact point a, terminal symbols C (COMMON) and NO (NORMALLY OPEN)
- For contact point b, terminal symbols C (COMMON) and NC (NORMALLY CLOSED)

[3] Make wiring within the terminal box. The construction of the terminal box makes wiring be possible.

[4] The limit switch may activate at startup if startup torque exceeds preset torque (when shock occurs at startup, the motor is equipped with a brake, etc.). In this case, install a motor timer to disable the limit switch until the load torque becomes less than the preset torque.

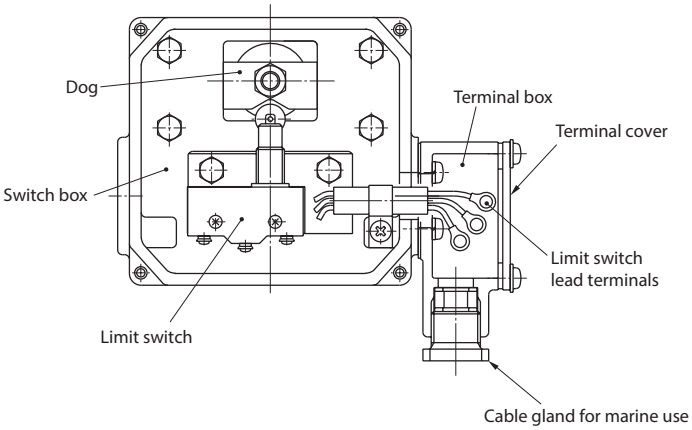


Figure 11-2 Terminal Box·Switch Box

Note : 1. For 2-point signal systems, there are two terminal boxes; for 3-point signal systems, there are three terminal boxes.
2. The cable gland for marine use conforms to JIS F 8801 (for boxes) and 15-b.

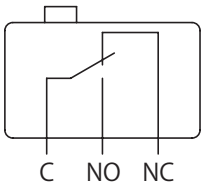


Figure 11-3 Type of Contact (1c)

- To prevent moisture from entering the cable port, seal openings with sealant (for example, putty).
- Do not move the position of the limit switch, or the torque limiter does not work properly because preset torque was changed.

### (3) Limit Switch Specifications

Table 11-1 Model Products of OMRON Corporation.

| Signal \ Rotation Direction | Right or Left | Reversible Direction |
|---|---|---|
| Main motor OFF | Z–15GQ22–B (1 piece) | |
| Submotor or alarm ON | Z–15GQ–B (1 piece) | Z–15GQ–B (2 pieces) |
| Auxiliary signal | Z–15GQ–B (1 piece) | Please consult with us. |

Table 11-2 Rating

| Rated Voltage (V) | Noninductive Load (A) | | | | Inductive Load (A) | | | |
|---|---|---|---|---|---|---|---|---|
| | Resistance Load | | Lamp Load | | Inductive Load | | Motor Load | |
| | Normally Closed Circuit | Normally Open Circuit | Normally Closed Circuit | Normally Open Circuit | Normally Closed Circuit | Normally Open Circuit | Normally Closed Circuit | Normally Open Circuit |
| AC 125 | 15 | | 3 | 1.5 | 15 | | 5 | 2.5 |
| 250 | 15 | | 2.5 | 1.25 | 15 | | 3 | 1.5 |
| 500 | 10 | | 1.5 | 0.75 | 6 | | 1.5 | 0.75 |
| DC 8 | 15 | | 3 | 1.5 | 15 | | 5 | 2.5 |
| 14 | 15 | | 3 | 1.5 | 10 | | 5 | 2.5 |
| 30 | 6 | | 3 | 1.5 | 5 | | 5 | 2.5 |
| 125 | 0.5 | | 0.5 | 0.5 | 0.05 | | 0.05 | 0.05 |
| 250 | 0.25 | | 0.25 | 0.25 | 0.03 | | 0.03 | 0.03 |

Table 11-3 Contact Point Specification

| Inrush Current | Normally Closed Circuit | Normally Open Circuit |
|---|---|---|
| | Max. 30A | Max. 15A |

Note : 1. Values shown in the table indicate steady-state current.
2. An inductive load is a power factor of 0.4 (AC) or more, or a time constant of 7 ms (DC) or less.
3. A lamp load is a load with an inrush current 10 times as high.
4. A motor load is a load with inrush current 6 times as high.
5. Working ambient temperature: General type -25 to 80℃ (no ice)
Working ambient humidity: General type 35 to 85%RH (no condensation)

### (4) Example of How to Connect a Spring-Loaded Limit Switch (2-Point Signal, Dual Safety, Reversible Rotation)

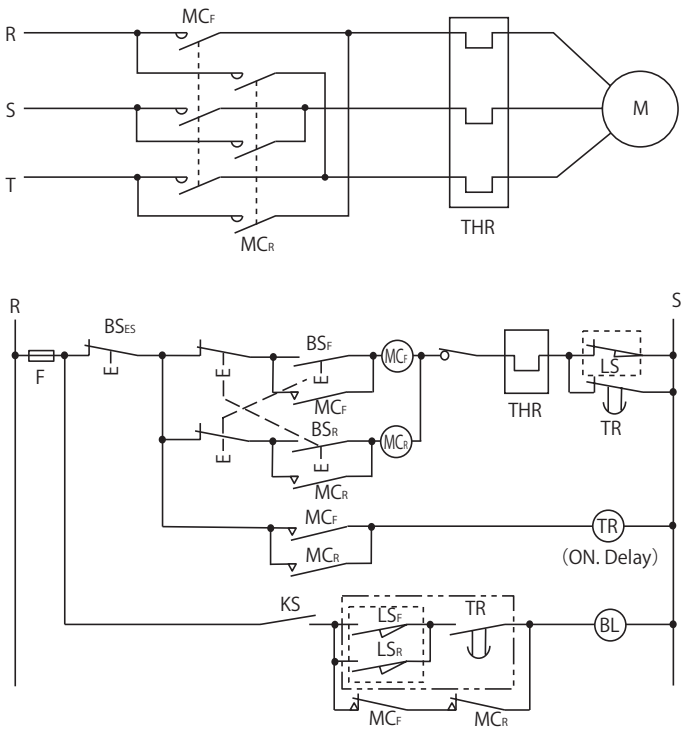


M …… Motor
MCF … Electromagnetic switch for forward motor rotation
MCR … Electromagnetic switch for reverse motor rotation
BSF … Pushbutton switch for forward rotation
BSR … Pushbutton switch for reverse rotation
BSES … Pushbutton switch for stopping
THR … Thermal relay
LS…… Limit switch (for forward, reverse and stop)
LSF … Limit switch (for forward alarm)
LSR … Limit switch (for reverse alarm)
KS … Knife switch
TR … Motor timer
F …… Fuse
BL … Alarm

Note : 1. Limit switches LS, LSF and LSR surrounded by ⬚ are built-in on CYCLO Drive with torque limiter other devices should be supplied by customer.
2. If there is an overload, LSF (LSR) and LS operate in order.
3. Devices within are ⬚ not required for 1-point signals.

**⚠ CAUTION**

- Increasing the preset torque will cause the torque limiter to function at a torque value that exceeds the initial setpoint. Damage to the machine may occur.

## 12-1 Adjusting Preset Torque for the Spring-Loaded Limit Switch Model

Prestet torque is possible to be adjusted in the range of ±25% value which is after factory shipment.

Table 12-1 Propriety to adjust preset torque and position of adjusting bolt

| Output signals | Torque indicator | Rotational direction of slow speed shaft | Side of adjustment bolt | | | Adjustment of preset torque |
|---|---|---|---|---|---|---|
| | | | 1 stage reduction | 2 stage reduction | 3 stage reduction | |
| 1 & 2 | Without<br>Type A (Indicated load ratio: 60 - 100% or 50 - 100%) | CW | Left | Right | Right | OK |
| | | CCW | Right | Left | Left | |
| | | Both | Both | Both | Both | |
| | Type B (Indicated load ratio: 0 - 100%) | CW | Both | Both | Both | NG |
| | | CCW | Both | Both | Both | |
| | | Both | Both | Both | Both | |

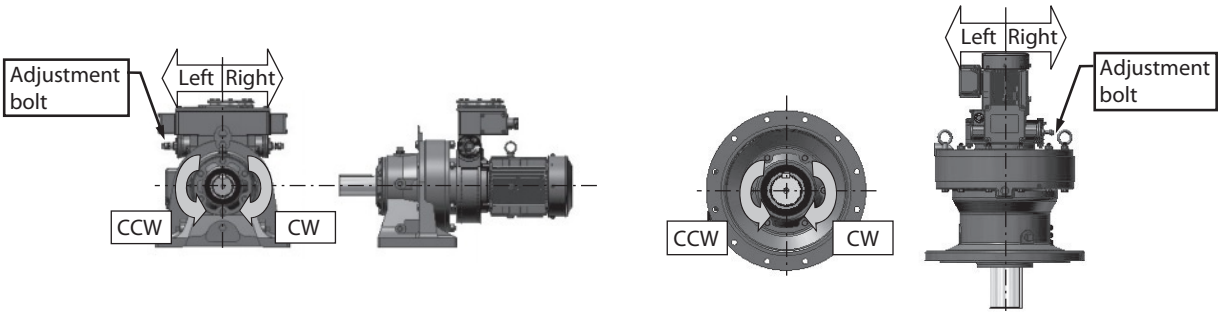


- The preset torque is shown at the center of the adjusting scale plate [1] in the figure below.
  Torque values indicated by T1 and T2 are positioned at ± 150° from the center. Use T1 and T2 as points of reference when changing the preset torque.

- When it is necessary to increase or decrease the original preset torque, use the adjustment bolt [2].
  Adjust torque within a range of ± 25% of the preset torque.
  Overscaling T1 and T2 is permitted within ± 25%. However, do not make adjustment in excess of the maximum preset torque. (See the selection table in the catalog.)

- An index [4] is stamped in the cut on the side of the threaded section of the adjustment bolt [2]. The index [4] is aligned with the end face of the case cover [3] when the mark [5] on the adjusting bolt [2] is located at the position of the preset torque on the adjusting scale plate [1]. Make fine adjustments using this alignment as a base. If the adjustment bolt is too tight or too loose, first reset the adjustment bolt to align the index [4] with the end face of the case cover [3]. Then make adjustments.

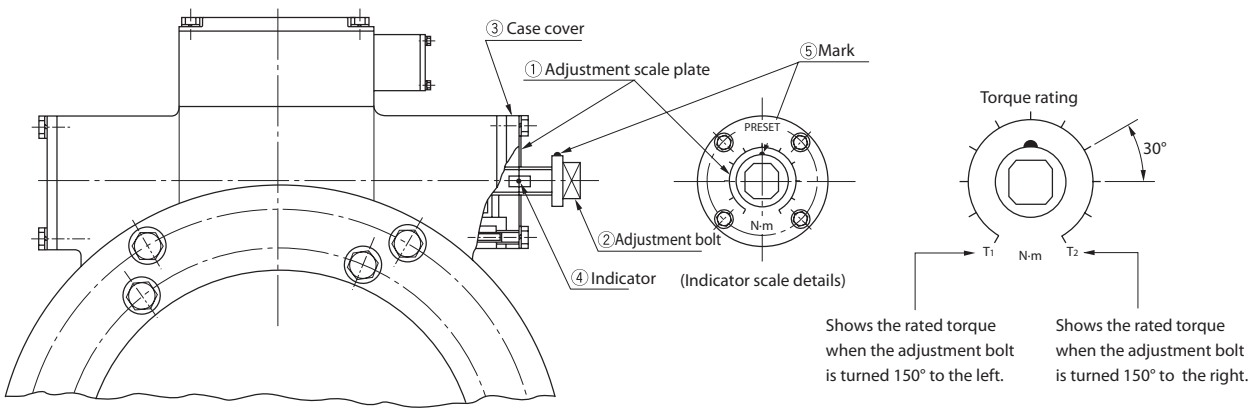


Figure 12-1 Adjusting Preset Torque

Note : 1. For the reversible rotation specification, an adjustment bolt and adjustment scale plate will be located on both sides.
2. In the case of the B-type torque indicator (indicating a load factor of 0 – 100%), it is not possible to adjust the preset torque.

## 13-1 Torque Limiter, Daily Check

Open the switch box and check every time that oil is replenished or changed.

### (1) Limit Switch

- Use a tester to see if the limit switch activates normally.
- If it is possible to run the device, force the limit switch to activate while the machine is running to determine whether the torque limiter works properly.

### (2) Dog

- Check to determine whether the nut that secures the dog is loose.
- If it is possible to run the device, confirm that, on startup, the dog moves from its stopped condition.

### (3) Oil leakage

- Check to determine whether oil has leaked into the switch box.
- If oil leaks in, the limit switch may not activate, preventing the torque limiter from working.

- Do not move the position of the limit switch because moving it will change the preset torque value. This will prevent the torque limiter from working properly.
- A load test is performed and preset torque is adjusted when the device is shipped from the factory.
  If the customer disassembles and reassembles the device, the preset torque could change, causing the torque limiter to stop working properly. This is a source of damage to the device. Therefore, if disassembly or reassembly is required, contact the nearest accredited service station.

## 13-2 Lubricating Vertical Type, Frame Sizes 6130, 6135, 6140, 6145

### (1) Lubrication and Maintenance

Vertical CYCLO Drives with Torque Limiter, frame sizes 6130, 6135, 6140, 6145 are grease lubricated.
(For lubrication for other than the vertical type, frame sizes 6130, 6135, 6140, 6145, see P36 – 45.)

Table 13-1 Grease Replenishment Intervals

| Operation Time | Replenishment Interval | Remarks |
|---|---|---|
| Less than 10 hours a day | Once every 3 – 6 months | In the case of severe operating conditions, shorten the replenishment period. Maintenance with disassembly after approximately 20,000 hours or three to five years will further increase lifetime. |
| 10 – 24 hours a day | Once every 500 – 1,000 hours | |

Table 13-2 Recommended Grease (Grease Used when Shipped)

| Manufacturer | Description | Ambient Temperature ℃ |
|---|---|---|
| Cosmo | COSMO GREASE DYNAMAX SH No.2 | -10 to 50 |
| Mobil | UNIREX N2 | |

Note : 1. Only use grease listed in Table 13-2.
2. When regularly used in an ambient temperature outside the 0 to 40℃ range, some specifications will differ. Please consult us.

Table 13-3 Grease Replenishment Quantity (Guidelines)

| Frame Size | Replenishment Quantity (g) |
|---|---|
| 6130, 6135, 6140, 6145 | 150 |

### (2) Procedures for Filling and Discharging

[1] Remove the grease discharge plug from the casing.
[2] Use a grease gun to replenish through the grease fittings for the internal cover and the motor flange bracket, using the quantities of grease shown in Table 13-3 as guidelines.
[3] Replace the grease discharge plug.

- Grease while the machine is running to improve grease distribution.
- In addition to being used for discharging grease, the grease discharge plug also functions as a pressure vent when replenishing grease. Make certain to remove when replenishing.
- Replenish grease slowly.
- Replenishing more than the quantity shown in Table 13-3 may cause agitation heat, which raises the temperature, and may cause grease to leak into the motor unit.

## 14-1 Torque Indicator

### (1) Checking the Torque Indicator

- The torque indicator is zero adjusted, and the preset torque is adjusted before shipment.
  After the reducer has been connected to equipment, if zero is not indicated when the reducer is at rest, it is possible that a small load is already being applied to the output shaft. Do not readjust the zero point.

- The relationship between the direction of pointer deflection and slow speed shaft rotation (seen from the slow speed shaft side) is shown below.
  Single reduction type: pointer opposite direction of the slow speed shaft
  Double, triple reduction types: pointer in the same direction as the slow speed shaft

- The indicator scale displays the load factor, with 100% being the preset torque. Accuracy is within 10% of the overall load range.

### (2) A-Type Torque Indicator

The A-type torque indicator displays load factors of 60 – 100% (depending on the combination of preset torque and reduction ratio 50 – 100%).

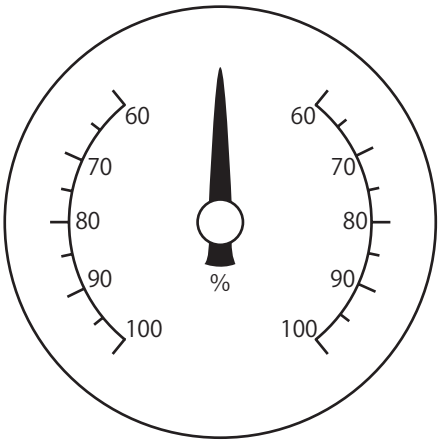


Figure 14-1 A-Type Torque Indicator
(60 – 100% load factor display)

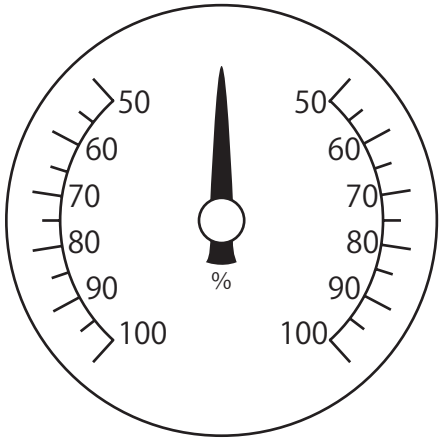


Figure 14-2 A-Type Torque Indicator
(50 – 100% load factor display)

- The pointer may deflect slightly when stopped or under no load. This is not a problem.
- For the reversible rotation specification, when left and right preset torques differ, the pointer position will be slightly offset.

### (3) B-Type Torque Indicator

The B-type torque indicator displays load factors of 0 – 100%.

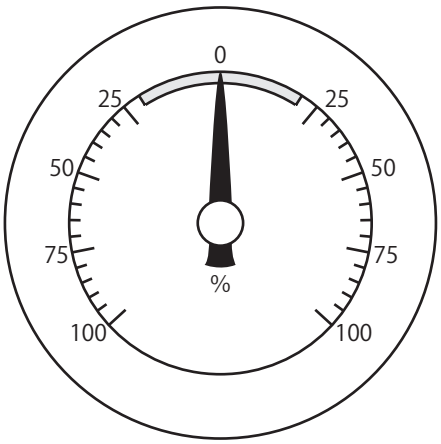


Figure 14-3 B-Type Torque Indicator (0 – 100% load factor display)

- In the case of a B-type torque indicator, the pointer will stop in the range of 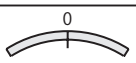

when load is removed.
- Preset torque cannot be changed. Do not turn the adjustment bolt.

## 15-1 Construction Drawings

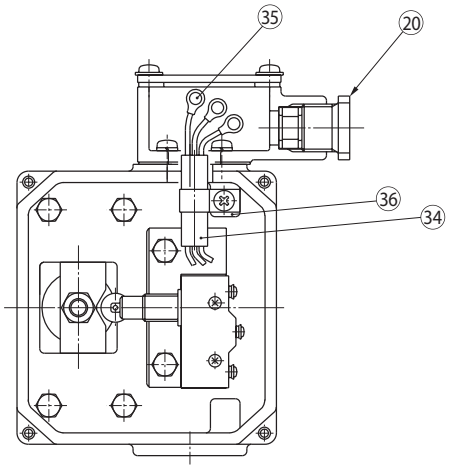


Cross-section B-B

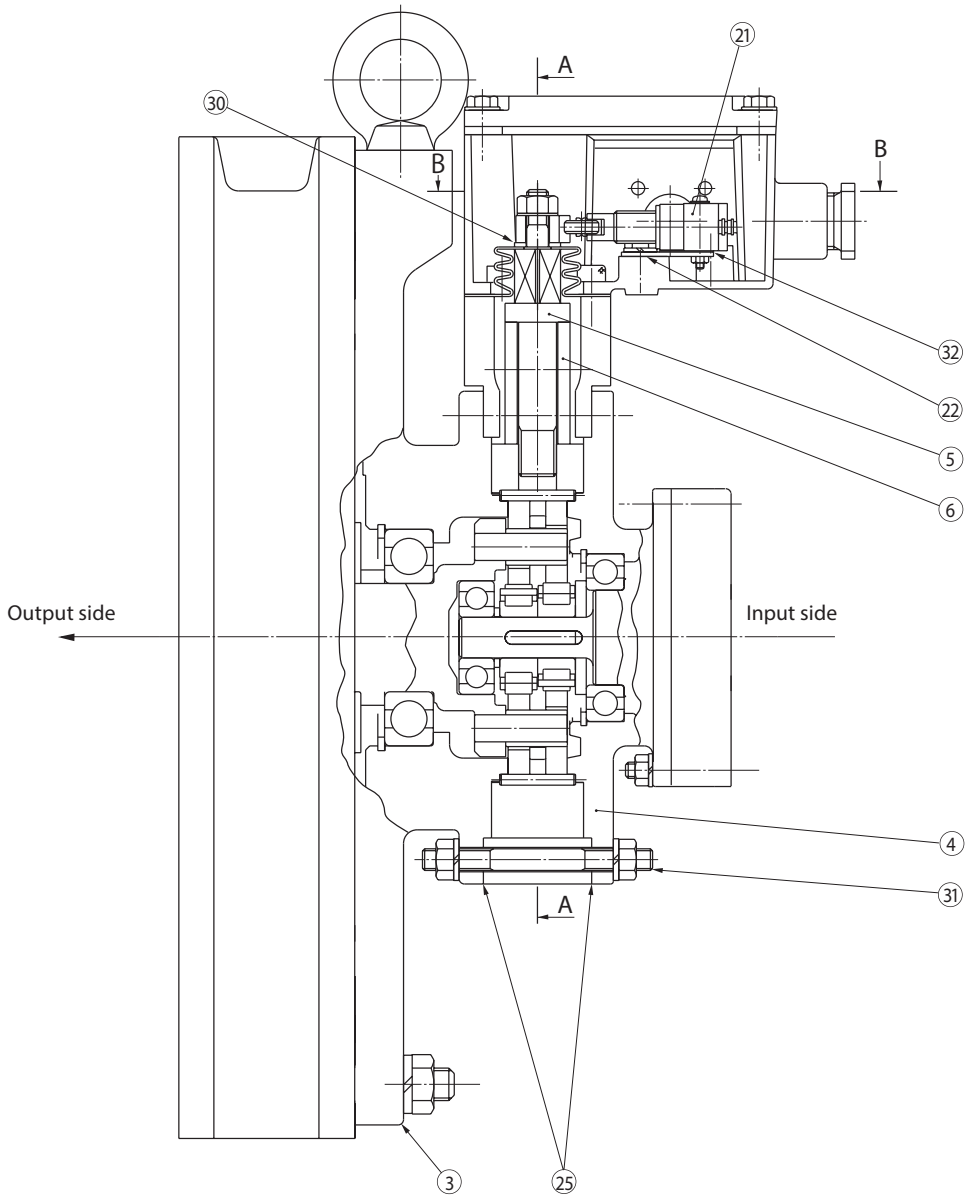


Figure 15-1 Type CHHM (Horizontal, Gearmotor), Triple Reduction

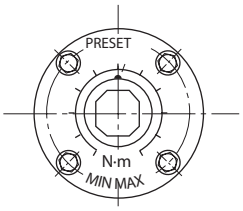


Viewed from C

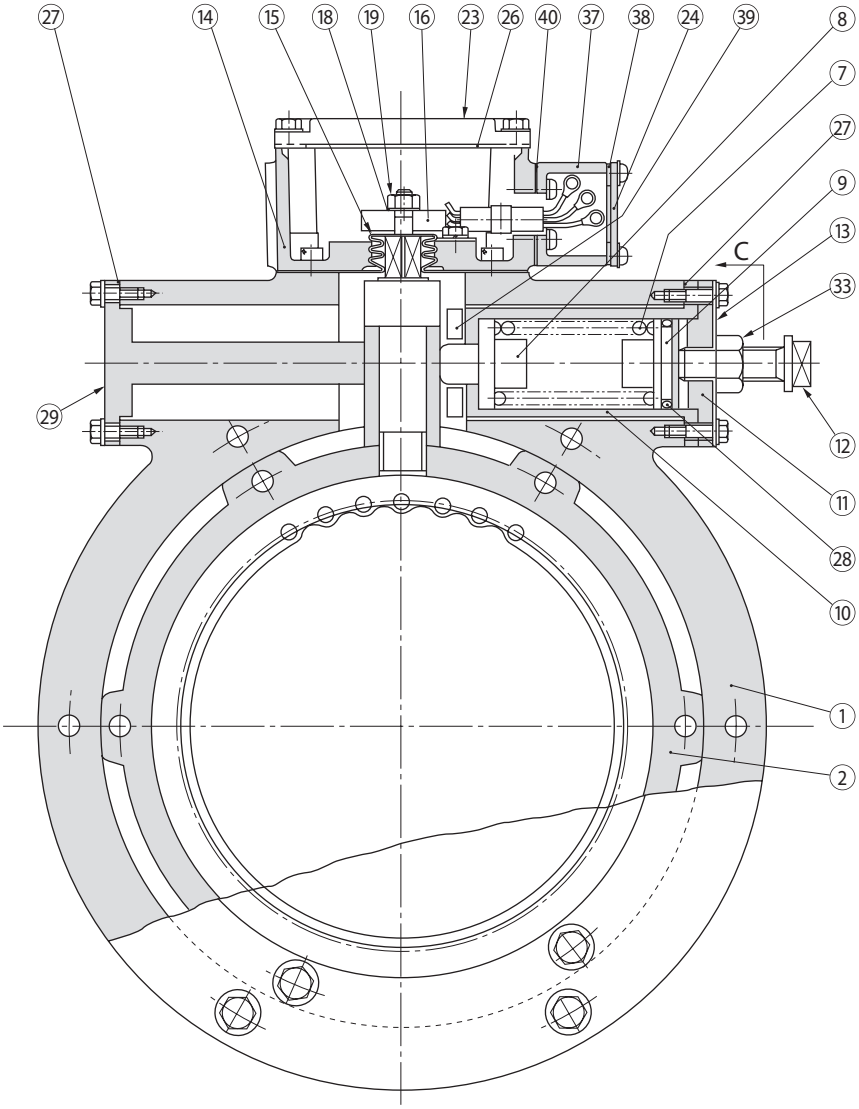


Cross-section A-A

Figure 15-2 Type CHHM (Horizontal, Gearmotor), Triple Reduction

Table 15-1 Torque Limiter Principal Parts

| No. | Part Name |
|---|---|
| 1 | Fixed ring gear housing |
| 2 | Ring gear housing |
| 3 | Intermediate cover |
| 4 | Intermediate cover (Internal cover / Motor flange bracket) |
| 5 | Dog bar |
| 6 | Bushing |
| 7 | Spring |
| 8 | Spring holder plate A |
| 9 | Spring holder plate B |
| 10 | Spring case |
| 11 | Case cover |
| 12 | Adjustment bolt |
| 13 | Adjustment scale plate |
| 14 | Switch box |
| 15 | Bellows |
| 16 | Dog |
| 18 | Toothed washer |
| 19 | Dog clamping nut |
| 20 | Cable gland for marine use |
| 21 | Limit switch |
| 22 | Switch mounting bracket |
| 23 | Switch box cover |
| 24 | Terminal cover |
| 25 | Gasket |
| 26 | Gasket |
| 27 | Gasket |
| 28 | O-ring |
| 29 | Stopper |
| 30 | Flat washer |
| 31 | Bolts for fixed ring gear housing |
| 32 | Insulation board |
| 33 | Stopping nut |
| 34 | Cabtyre cable |
| 35 | Limit switch lead terminal |
| 36 | Terminal plate (with clamp) |
| 37 | Terminal box |
| 38 | Gasket |
| 39 | Spacer |
| 40 | Gasket |

## 15-2 Torque Indicator Construction Drawings

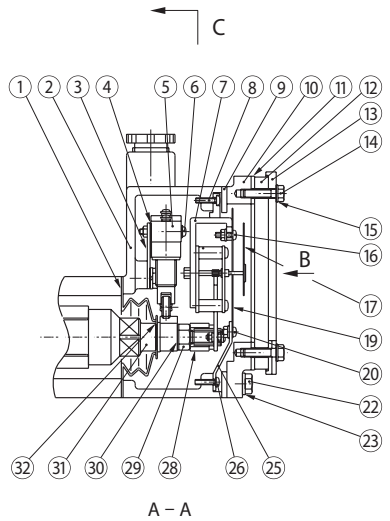


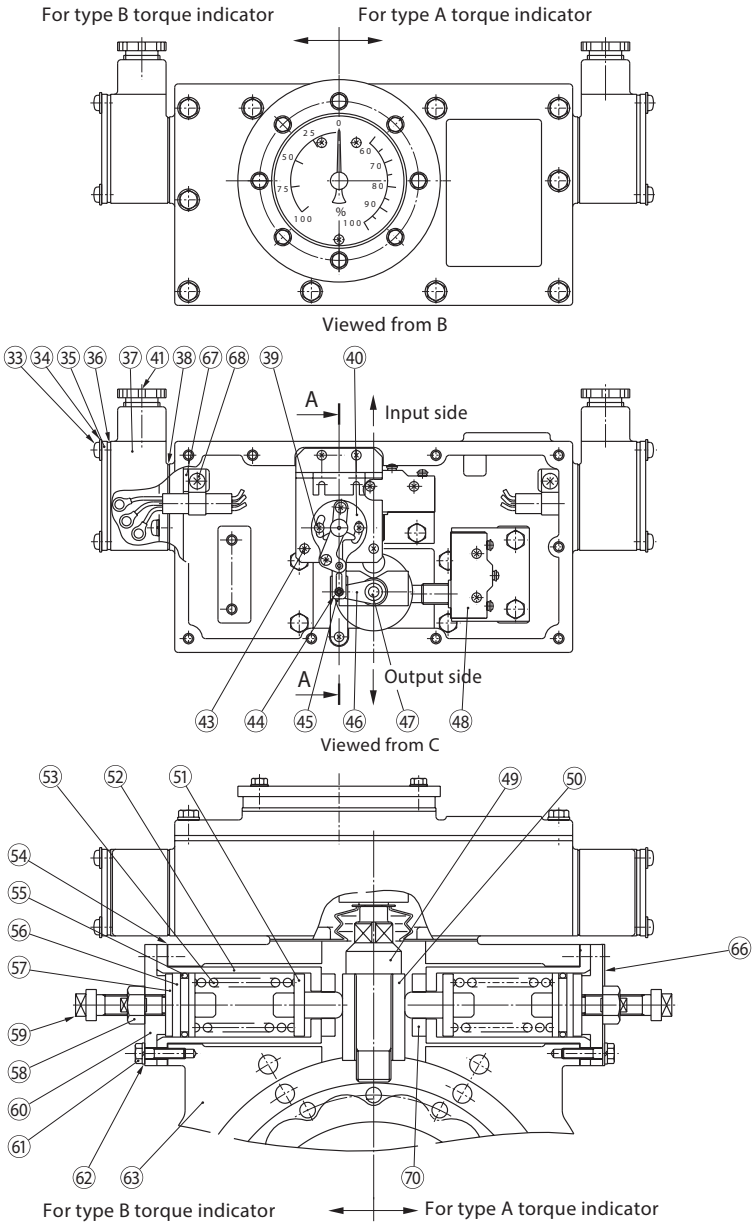


Figure 15-3 Torque Indicator

Table 15-2 Torque Indicator Principal Parts

| No. | Part Name |
|---|---|
| 1 | Bellows |
| 2 | Switch box |
| 3 | Switch mounting bracket |
| 4 | Insulation board |
| 5 | Microswitch (for stopping motor) |
| 6 | Philips pan head machine screw |
| 7 | Motor assembly mounting base |
| 8 | Philips pan head machine screw |
| 9 | Gasket |
| 10 | Switch cover |
| 11 | Gasket |
| 12 | Transparent cover |
| 13 | Holding plate for transparent cover |
| 14 | Upper bolt |
| 15 | Washer with rubber |
| 16 | Philips pan head machine screw |
| 17 | Pointer |
| 19 | Scale plate |
| 20 | Philips pan head machine screw |
| 22 | Upper bolt |
| 23 | Washer with rubber |

| No. | Part Name |
|---|---|
| 25 | Scale plate mounting base |
| 26 | Philips pan head machine screw |
| 28 | Spacer for rod |
| 29 | Upper nut |
| 30 | Toothed washer |
| 31 | Dog |
| 32 | Flat washer |
| 33 | Upper bolt |
| 34 | Washer with rubber |
| 35 | Terminal cover |
| 36 | Gasket |
| 37 | Terminal box |
| 38 | Gasket |
| 39 | Philips pan head machine screw |
| 40 | Internal machine |
| 41 | Cable gland for marine use |
| 43 | Philips pan head machine screw |
| 44 | Sector |
| 45 | Nut |
| 46 | Rod |
| 47 | Bushing for rod |

| No. | Part Name |
|---|---|
| 48 | Microswitch (for alarm) |
| 49 | Dog bar |
| 50 | Bushing |
| 51 | Spring holder plate A |
| 52 | Spring case |
| 53 | Spring |
| 54 | Gasket |
| 55 | O-ring |
| 56 | Spring holder plate B |
| 57 | Preload plate |
| 58 | Lock nut |
| 59 | Adjustment bolt |
| 60 | Case cover |
| 61 | Upper bolt |
| 62 | Washer with rubber |
| 63 | Fixed ring gear housing |
| 66 | Adjustment scale plate |
| 67 | Terminal plate |
| 68 | Upper bolt |
| 70 | Spacer |
| | |

## Application Product

# CYCLO® Drive with Special Vertical Base Mount

## C14VM C15VM C17VM C18VM
## C24VM C25VM C27VM C28VM
## C3VM

This manual covers the base unit.
For information on handling the reducer unit and the motor unit see P1 – 79.

**Contents**

**⚠ CAUTION**

- When coupling the gearmotor or reducer with a load, check that centering is within the specified limits. Correctly tighten bolts on the coupling before operation; otherwise, injury may result because of misalignment.
- Confirm the rotation direction before coupling the unit with the driven machine. For C15VM, C18VM, C25VM and C28VM, check the direction of the shaft end screw. (Standard specification is left-handed screw.) Incorrect rotation direction may cause personal injury or damage the equipment.

## 16-1 Agitator Shaft Assembly

The connected agitator's shaft end shape will differ based on product model. Connect in accordance with the product's coupling shape.

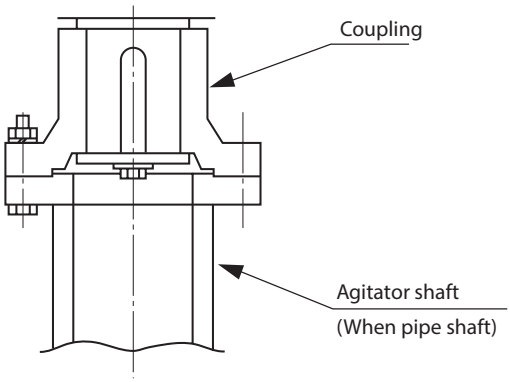


Figure 16-1 Example of Agitator Shaft Assembly
(C14VM, C17VM, C24VM, C27VM)

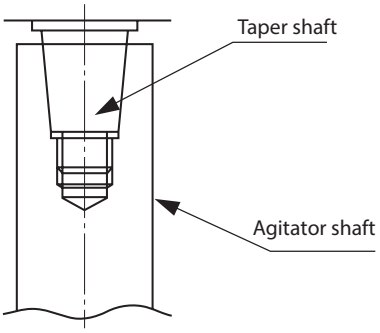


Figure 16-2 Example of Agitator Shaft Assembly
(C15VM, C18VM, C25VM, C28VM)

Note : For C14VM, C24VM, C17VM, C27VM, use coupling bolts with the strength class shown in Table 16-1.

Table 16-1 Coupling Bolts

C14VM

| Frame Size | JIS Strength Class |
|---|---|
| 609□, 610□ | 8.8 and above |
| 612□ | 12.9 and above |
| 613□ | 10.9 and above |
| 614□ | 12.9 and above |
| 616□ | 10.9 and above |
| 617□ | |
| 618□ | |
| 619□ | |

C17VM

| Frame Size | JIS Strength Class |
|---|---|
| 609□, 610□ | 8.8 and above |
| 612□ | |
| 613□, 614□ | |
| 616□ | |
| 617□ | |
| 618□ | |
| 619□ | |
| 6205 | |
| 6215 | |
| 6225 | |
| 6235 | |
| 6245 | |
| 6255 | |
| 6265 | |

C24VM, C27VM

| Frame Size | JIS Strength Class |
|---|---|
| 608□ | 8.8 and above |
| 609□, 610□, 611□ | |
| 612□ | |
| 613□ | |
| 614□ | |
| 616□ | |
| 617□ | |
| 618□ | |

Note : The symbol □ in frame size can be "0" or "5". For double reduction and triple reduction types, DA, TA, etc. will be appended to the frame size.

## 16-2 Allowable Bending Moment, Axial Load

Table 16-2 Allowable Bending Moment (N・m)

| Frame Size | Model | | | |
|---|---|---|---|---|
| | C14VM, C15VM | C17VM, C18VM | C24VM, C25VM | C27VM, C28VM |
| 608 □ | – | – | 343 | 687 |
| 609 □ | 343 | 687 | 638 | 1230 |
| 610 □ | 343 | 687 | 638 | 1230 |
| 611 □ | – | – | 638 | 1230 |
| 612 □ | 638 | 1230 | 1080 | 2160 |
| 613 □ | 1080 | 2160 | 1570 | 3140 |
| 614 □ | 1080 | 2160 | 1570 | 3140 |
| 616 □ | 1570 | 3140 | 2260 | 4410 |
| 617 □ | 2260 | 4410 | 2940 | 5890 |
| 618 □ | 2940 | 5890 | 3830 | 7550 |
| 619 □ | 3830 | 7550 | – | – |
| 6205 | – | 10800 | – | – |
| 6215 | – | 13700 | – | – |
| 6225 | – | 15700 | – | – |
| 6235 | – | 18600 | – | – |
| 6245 | – | 24500 | – | – |
| 6255 | – | 31400 | – | – |
| 6265 | – | 37300 | – | – |

Table 16-3 Allowable Axial Load (N)

| Frame Size | Model | | | | |
|---|---|---|---|---|---|
| | C14VM, C15VM | C17VM, C18VM | C24VM, C25VM | C27VM, C28VM | C3VM |
| 608 □ | – | – | 981 | 981 | – |
| 609 □ | 981 | 981 | 1670 | 1670 | – |
| 610 □ | 981 | 981 | 1670 | 1670 | – |
| 611 □ | – | – | 1670 | 1670 | – |
| 612 □ | 1670 | 1670 | 2650 | 2650 | – |
| 613 □ | 2650 | 2650 | 3730 | 3730 | – |
| 614 □ | 2650 | 2650 | 3730 | 3730 | – |
| 616 □ | 3730 | 3730 | 4910 | 4910 | – |
| 617 □ | 4910 | 4910 | 6180 | 6180 | – |
| 618 □ | 6180 | 6180 | 7650 | 7650 | 21600 |
| 619 □ | 7650 | 7650 | – | – | 32400 |
| 6205 | – | 9810 | – | – | – |
| 6215 | – | 11800 | – | – | 46100 |
| 6225 | – | 13700 | – | – | 51000 |
| 6235 | – | 15700 | – | – | 51000 |
| 6245 | – | 20600 | – | – | – |
| 6255 | – | 24500 | – | – | – |
| 6265 | – | 29400 | – | – | – |

Note: 1. The symbol □ in frame size can be "0" or "5". For double reduction and triple reduction types, DA, TA, etc. will be appended to the frame size.
2. Allowable bending moment is the value in the mounting flange.
3. Axial load is possible in the vertical direction. (C3VM only faces downward.)
4. Use is possible up to the allowable value, even if bending moment and axial load are both present. (Except C3VM.)
5. Depending on the bending moment, axial load exceeding the allowable value may be allowed. Please consult us. (Except C3VM.)
6. C3VM values are for reduction ratios of 1/2537 and above.
7. Allowable values are the same for double and triple reduction types.

## 17-1 Base Unit Grease Replenishment

- All base unit bearings are grease lubricated. Units are shipped greased using the greases in Table 17-2, so they can be used as is.
- Make certain to perform maintenance. Neglecting maintenance is a source of problems.

### (1) Grease Replenishment Intervals

Table 17-1 Grease Replenishment Intervals

| Part | Replenishment Interval |
|---|---|
| Base unit | 1 time/2 – 3 years |

### (2) Recommended Grease

Table 17-2 Recommended Grease (Grease Used when Shipped)

| Ambient Temperature ℃ | Manufacturer | Description |
|---|---|---|
| -10 to 50 | COSMO | COSMO GREASE DYNAMAX SH No.2 |
| | Mobil | UNIREX N2 |

### (3) Grease Replenishment Quantity

Table 17-3 Grease Replenishment Quantity Guidelines (g)

| Frame Size | Model | | | | | | | | |
|---|---|---|---|---|---|---|---|---|---|
| | C14VM, C15VM | | C17VM, C18VM | | C24VM, C25VM | | C27VM, C28VM | | C3VM |
| | Bearing A | Bearing B | Bearing A | Bearing B | Bearing A | Bearing B | Bearing A | Bearing B | Bearing |
| 608 □ | – | – | – | – | 5 | 5 | 7 | 5 | – |
| 609 □ | 5 | 5 | 7 | 5 | 7 | 5 | 10 | 5 | – |
| 610 □ | 5 | 5 | 7 | 5 | 7 | 5 | 10 | 5 | – |
| 611 □ | – | – | – | – | 7 | 5 | 10 | 5 | – |
| 612 □ | 7 | 5 | 10 | 5 | 13 | 7 | 15 | 7 | – |
| 613 □ | 13 | 7 | 15 | 7 | 17 | 10 | 35 | 10 | – |
| 614 □ | 13 | 7 | 15 | 7 | 17 | 10 | 35 | 10 | – |
| 616 □ | 17 | 10 | 35 | 10 | 20 | 15 | 50 | 15 | – |
| 617 □ | 20 | 15 | 50 | 15 | 30 | 20 | 70 | 20 | – |
| 618 □ | 30 | 20 | 70 | 20 | 35 | 30 | 100 | 30 | 25 |
| 619 □ | 35 | 30 | 100 | 30 | – | – | – | – | 40 |
| 6205 | – | – | 40 | 35 | – | – | – | – | – |
| 6215 | – | – | 65 | 50 | – | – | – | – | 65 |
| 6225 | – | – | 65 | 50 | – | – | – | – | 65 |
| 6235 | – | – | 70 | 65 | – | – | – | – | 95 |
| 6245 | – | – | 125 | 85 | – | – | – | – | – |
| 6255 | – | – | 125 | 110 | – | – | – | – | – |
| 6265 | – | – | 210 | 150 | – | – | – | – | – |

Note: 1. The symbol □ in frame size can be "0" or "5". For double reduction and triple reduction types, DA, TA, etc. will be appended to the frame size.
2. Replenishment quantities are the same for double and triple reduction types.

### (4) Replenishment Procedure

Using a grease gun, replenish through grease fittings [2] and [8] (see P95, for C3VM, use [6]). See Table 17-3 for guidelines on quantity.

- If the product has not been operated for one year or longer, make certain to replenish grease before resuming operation.
- Grease while the machine is running to improve grease distribution.
- Replenish grease slowly.
- Contact the nearest authorized service station concerning a complete grease change.

## 17-2 Main Unit Maintenance

Oil seals have lifetimes. During long use, natural degradation and frictional wear will reduce effectiveness. Reducer operating conditions and ambient environment will cause lifetime to widely vary. Given normal operation, (uniform load, running 10 hours per day, normal temperature) as a guideline it is recommended to change them every 1 to 3 years. If the sliding surfaces of oil seals or V-rings show signs of wear or corrosion, replace them with new ones. Because sliding surfaces for oil seals are made of carbon steel, take on-going rust prevention measures regularly not to spread rust on them by applying rustproof oil and so on, if there are exposed surfaces of steel.

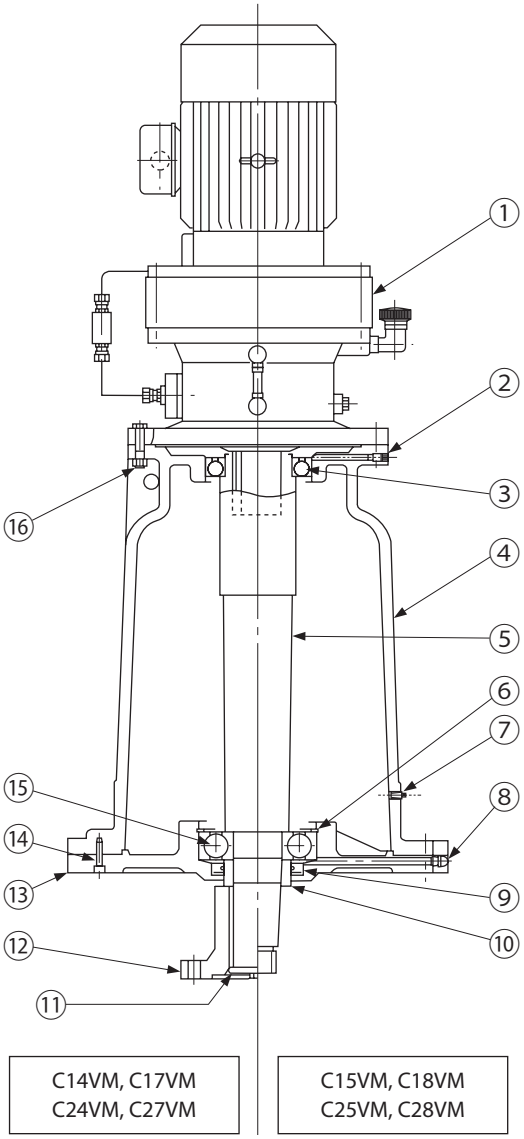


Figure 18-1 Models C14 – 28VM

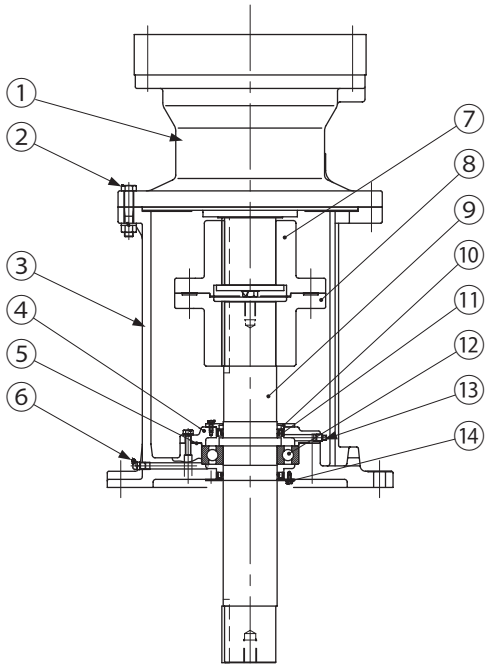


Figure 18-2 C3VM

Table18-1 Gear Unit, Principal Parts (Models C14 – 28VM)

| No. | Parts Name | No. | Parts Name |
|---|---|---|---|
| 1 | CYCLO Drive | 9 | Oil seal |
| 2 | A-type grease fitting | 10 | Collar |
| 3 | Bearing B | *11 | End plate |
| 4 | Base (1) | *12 | Rigid flanged shaft coupling |
| 5 | Shaft | 13 | Base (2) |
| 6 | Snap ring for opening | 14 | Fitting up bolt |
| 7 | Plug | 15 | Bearing A |
| 8 | B-type grease fitting | 16 | Hexagon head bolt, nut |

Note : Parts indicated by * are only for C14VM, C24VM, C17VM and C27VM.

Table18-2 Gear Unit, Principal Parts (C3VM)

| No. | Parts Name | No. | Parts Name |
|---|---|---|---|
| 1 | CYCLO Drive | 8 | 3V Coupling (2) |
| 2 | Hexagon head bolt | 9 | 3V shaft |
| 3 | 3V base | 10 | Dust-tight cover |
| 4 | Cover | 11 | Oil seal |
| 5 | Gasket | 12 | Bearing |
| 6 | Grease fitting | 13 | Drain plug |
| 7 | 3V Coupling (1) | 14 | Oil seal |

# 19. Warranty

The scope of our product warranty is limited to our manufacturing range.

Warranty (period and contents)

| | |
|---|---|
| **Warranty Period** | The product warranty period is 18 months after delivery, 18 months after shipment of the product from the seller, or 12 months from product commissioning, whichever is first. |
| **Warranty Conditions** | In the event that any problem or damage to the product arises during the "Warranty Period" from defects in the product whenever the product is properly installed and combined with the buyer's equipment or machines, maintained as specified in the maintenance manual, and properly operated under the conditions described in the catalog or as otherwise agree on in writing between the seller and the buyer or its customers, the seller will provide, at its sole discretion, appropriate repair or replacement of the product, without charge, at a designated facility, except as stipulated in the "Warranty Exclusions" described below.<br>However, if the product is installed or integrated into the Buyer's equipment or machines, the seller does not reimburse the following costs: removal or reinstallation of the product or other incidental costs related thereto, any lost opportunity, any profit loss or other incidental or consequential losses or damage incurred by the buyer or its customers. |
| **Warranty Exclusions** | Notwithstanding the above warranty, the warranty as set forth herein does not apply to any problem or damage to the product caused by:<br>1. Installation, connection, combination or integration of the product with or into the other equipment or machine that is rendered by any person or entity other than the seller;<br>2. Insufficient maintenance or improper operation by the buyer or its customers, such that the product is not maintained in accordance with the maintenance manual provided or designated by the seller;<br>3. Improper use or operation of the product by the buyer or its customers without informing the Seller, including, without limitation, the buyer's or its customers' operation of the product not in conformity with the specifications and use of lubricating oil that is not recommended by the seller;<br>4. Any problem or damage to any equipment or machine into or with which the Product is installed, connected or combined, or on any specifications particular to the buyer or its customers;<br>5. Any changes, modifications, improvements or alterations to the product or those functions that are rendered on the product by any person or entity other than the seller;<br>6. Any parts in the product that are supplied or designated by the buyer or its customers;<br>7. Earthquake, fire, flood, sea breeze, gas, thunder, acts of God or any other reasons beyond the control of the seller;<br>8. Normal wear and tear or deterioration of the product's parts, such as bearings and oil seals; and<br>9. Any other problems with or damage to the product that are not attributable to the seller. |

# Worldwide Locations

**U.S.A**

**Sumitomo Machinery Corporation of America (SMA)**
4200 Holland Blvd. Chesapeake, VA 23323, U.S.A.
TEL (1)757-485-3355 FAX (1)757-485-7490

**Canada**

**SM Cyclo of Canada, Ltd. (SMC)**
1453 Cornwall Road, Oakville, Canada ON L6J 7T5
TEL (1)905-469-1050 FAX (1)905-469-1055

**Mexico**

**SM Cyclo de Mexico, S.A. de C.V. (SMME)**
Av. Desarrollo 541, Col. Finsa, Guadalupe,
Nuevo León, México, CP67132
TEL (52)81-8144-5130 FAX (52)81-8144-5130

**Brazil**

**Sumitomo Industrias Pesadas do Brasil Ltda. (SHIB)**
Rodovia do Acucar (SP-075) Km 26
Itu, Sao Paulo, Brasil
TEL (55)11-4886-1000 FAX (55)11-4886-1000

**Chile**

**SM-Cyclo de Chile Ltda. (SMCH)**
Camino Lo Echevers 550, Bodegas 5 y 6,
Quilicura, Región Metropolitana, Chile
TEL (56)2-892-7000 FAX (56)2-892-7001

**Argentina**

**SM-Cyclo de Argentina S.A. (SMAR)**
Ing. Delpini, 2236 Area de Promocion el Triangulo,
Partido Malvinas Argentinas Grand Bourg,
Buenos Aires, Argentina B1615KGB
TEL (54)3327-45-4095 FAX (54)3327-45-4099

**Guatemala**

**SM Cyclo de Guatemala Ensambladora, Ltda. (SMGT)**
Parque Industrial Unisur, 0 Calle B 19-50 Zona 3,
Bodega D-1 Delta Bárcenas en Villa Nueva, Guatemala
TEL (502)6648-0500 FAX (502)6631-9171

**Colombia**

**SM Cyclo Colombia, S.A.S. (SMCO)**
Parque Industrial Celta, Km 7.0 Autopista Medellín,
Costado Occidental, Funza, Cundinamarca, Colombia
TEL (57)1-826-9766

**Peru**

**SM Cyclo de Perú, S.A.C (SMPE)**
Jr. Monte Rosa 255, Oficina 702, Lima,
Santiago de Surco, Perú
TEL (51)1-713-0342 FAX (51)1-715-0223

**Germany**

**Sumitomo (SHI) Cyclo Drive Germany GmbH (SCG)**
Cyclostraße 92, 85229 Markt Indersdorf, Germany
TEL (49)8136-66-0 FAX (49)8136-5771

**Austria**

**Sumitomo (SHI) Cyclo Drive Germany GmbH (SCG)**
**SCG Branch Austria Office**
Gruentalerstraße 30A, 4020 Linz, Austria
TEL (43)732-330958 FAX (43)732-331978

**Belgium**

**Hansen Industrial Transmissions NV (HIT)**
Leonardo da Vincilaan 1, Edegem, Belgium
TEL (32)34-50-12-11 FAX (32)34-50-12-20

**France**

**SM-Cyclo France SAS (SMFR)**
8 Avenue Christian Doppler, 77700 Serris, France
TEL (33)164171717 FAX (33)164171718

**Italy**

**SM-Cyclo Italy Srl (SMIT)**
Via dell' Artigianato 23, 20010 Cornaredo (MI), Italy
TEL (39)293-481101 FAX (39)293-481103

**Spain**

**SM-Cyclo Iberia, S.L.U. (SMIB)**
C/Gran Vía Nº 63 Bis, Planta 1, Departamento 1B
48011 Bilbao–Vizcaya, Spain
TEL (34)9448-05389 FAX (34)9448-01550

**United Kingdom**

**SM-Cyclo UK Ltd. (SMUK)**
Unit 29, Bergen Way, Sutton Fields Industrial Estate,
Kingston upon Hull, HU7 0YQ, East Yorkshire,
United Kingdom
TEL (44)1482-790340 FAX (44)1482-790321

**Turkey**

**SM Cyclo Turkey Güç Aktarım Sis. Tic. Ltd. Sti. (SMTR)**
Barbaros Mh. Çiğdem Sk. Ağaoğlu, Office Mrk. No:1 Kat:4 D.18
Ataşehir, İstanbul, Turkey
TEL (90)216-250-6069 FAX (90)216-250-5556

**India**

**Sumi-Cyclo Drive India Private Limited (SDI)**
Gat No. 186, Raisoni Industrial Park, Alandi Markal Road,
Fulgaon-Pune, Maharashtra, India
TEL (91)96-0774-5353

**China**

**Sumitomo (SHI) Cyclo Drive China, Ltd. (SCT)**
11F, SMEG Plaza, No. 1386 Hongqiao Road,
Changning District, Shanghai, China （P.C. 200336）
TEL (86)21-3462-7877 FAX (86)21-3462-7922

**Hong Kong**

**SM-Cyclo of Hong Kong Co., Ltd. (SMHK)**
Rm 1301, CEO Tower, 77 Wing Hong Street,
Cheung Sha Wan, Kowloon, Hong Kong
TEL (852)2460-1881 FAX (852)2460-1882

**Korea**

**Sumitomo (SHI) Cyclo Drive Korea, Ltd. (SCK)**
Royal Bldg. 19 Rm. 913, 5 Saemunan-ro 5-Gil Jongro-Gu
Seoul, Korea 03173
TEL (82)2-730-0151 FAX (82)2-730-0156

**Taiwan**

**Tatung SM-Cyclo Co., Ltd. (TSC)**
22 Chungshan N. Road 3rd., Sec. Taipei, Taiwan 104,
R.O.C.
TEL (886)2-2595-7275 FAX (886)2-2595-5594

**Singapore**

**Sumitomo (SHI) Cyclo Drive Asia Pacific Pte. Ltd. (SCA)**
15 Kwong Min Road, Singapore 628718
TEL (65)6591-7800 FAX (65)6863-4238

**Philippines**

**Sumitomo (SHI) Cyclo Drive Asia Pacific Pte. Ltd. Philippines Branch Office (SMPH)**
C4 & C5 Buildings Granville Industrial Complex, Carmona,
Cavite 4116, Philippines
TEL (63)2-584-4921 FAX (63)2-584-4922

**Vietnam**

**SM-Cyclo (Vietnam) Co., Ltd. (SMVN)**
Factory 2B, Lot K1-2-5, Road No. 2-3-5A,
Le Minh Xuan Industrial Park, Binh Chanh Dist.,
HCMC, Vietnam
TEL (84)8-3766-3709 FAX (84)8-3766-3710

**Malaysia**

**SM-Cyclo (Malaysia) Sdn. Bhd. (SMMA)**
No.7C, Jalan Anggerik Mokara 31/56, Kota Kemuning,
Seksyen 31, 40460 Shah Alam, Selangor Darul Ehsan,
Malaysia
TEL (60)3-5121-0455 FAX (60)3-5121-0578

**Indonesia**

**PT. SM-Cyclo Indonesia (SMID)**
Jalan Sungkai Blok F 25 No. 09 K, Delta Silicon III,
Lippo Cikarang, Bekasi 17530, Indonesia
TEL (62)21-2961-2100 FAX (62)21-2961-2211

**Thailand**

**SM-Cyclo (Thailand) Co., Ltd. (SMTH)**
195 Empire Tower, Unit 2103-4, 21st Floor, South
Sathorn Road, Yannawa, Sathorn, Bangkok 10120,
Thailand
TEL (66)2670-0998 FAX (66)2670-0999

**Australia**

**Sumitomo (SHI) Hansen Australia Pty. Ltd. (SHAU)**
181 Power St, Glendenning, NSW 2761, Australia
TEL (61)2-9208-3000 FAX (61)2-9208-3050

**Japan**

**Sumitomo Heavy Industries, Ltd. (SHI)**
ThinkPark Tower, 1-1 Osaki 2-chome, Shinagawa-ku,
Tokyo 141-6025, Japan
TEL (81)3-6737-2511 FAX (81)3-6866-5160

Specifications, dimensions, and other items are subject to change without prior notice.

Sumitomo Heavy Industries, Ltd.

**Power Transmission & Controls Group**

Headquarter ThinkPark Tower, 1-1 Osaki 2-chome, Shinagawa-ku, Tokyo 141-6025, Japan

No.CM2001E-12.9

EA10 Printed 2020.06